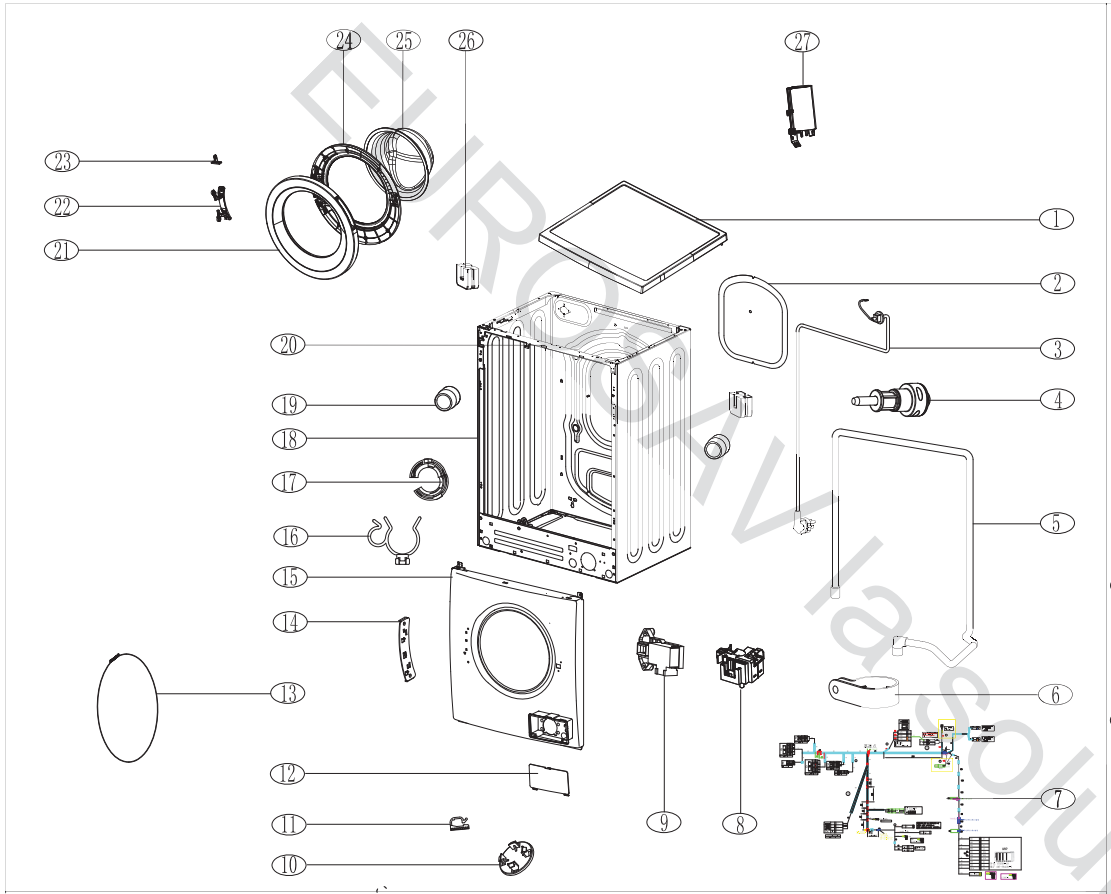

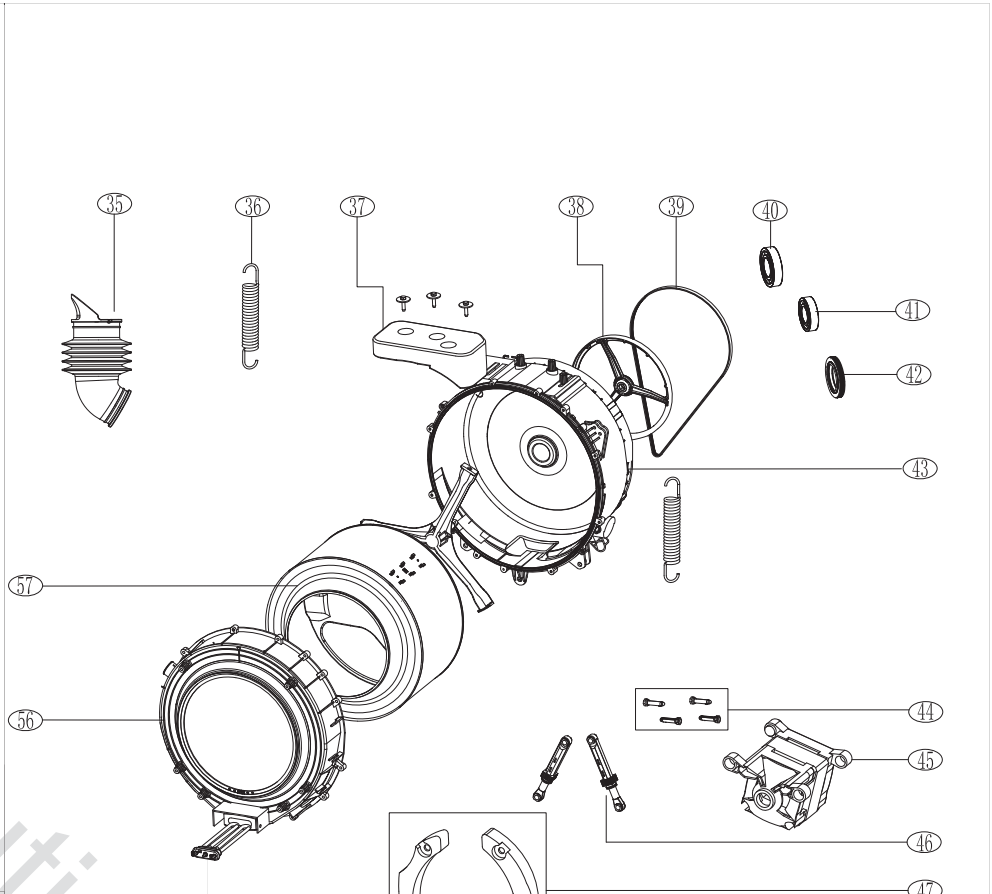

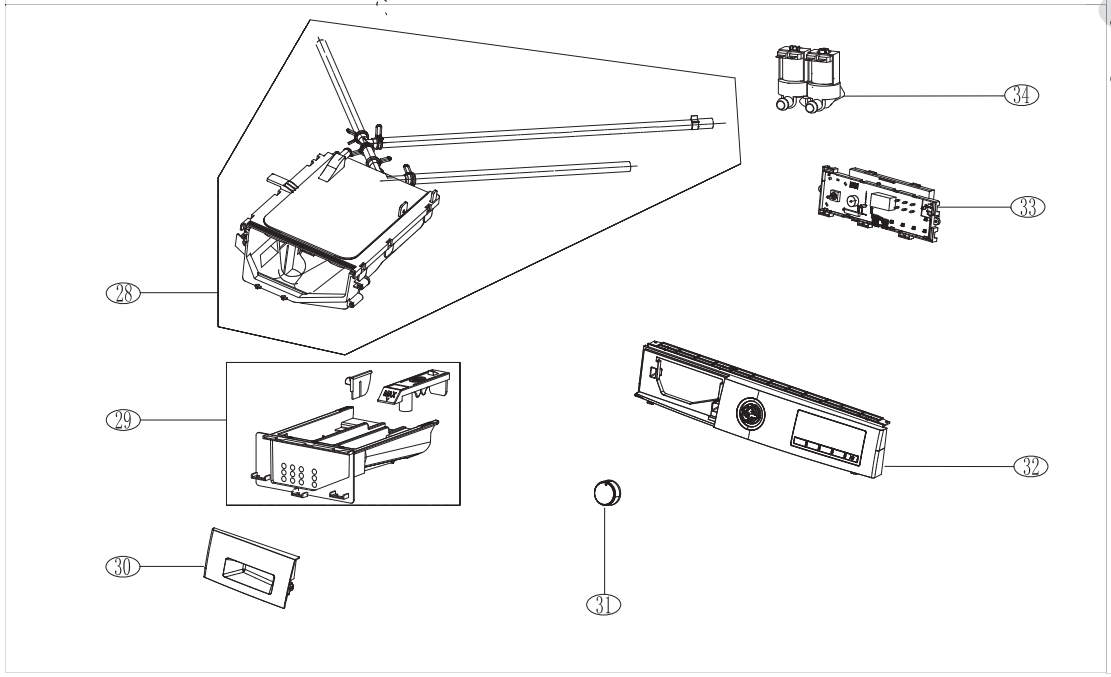

EUROSAV la solution assistance