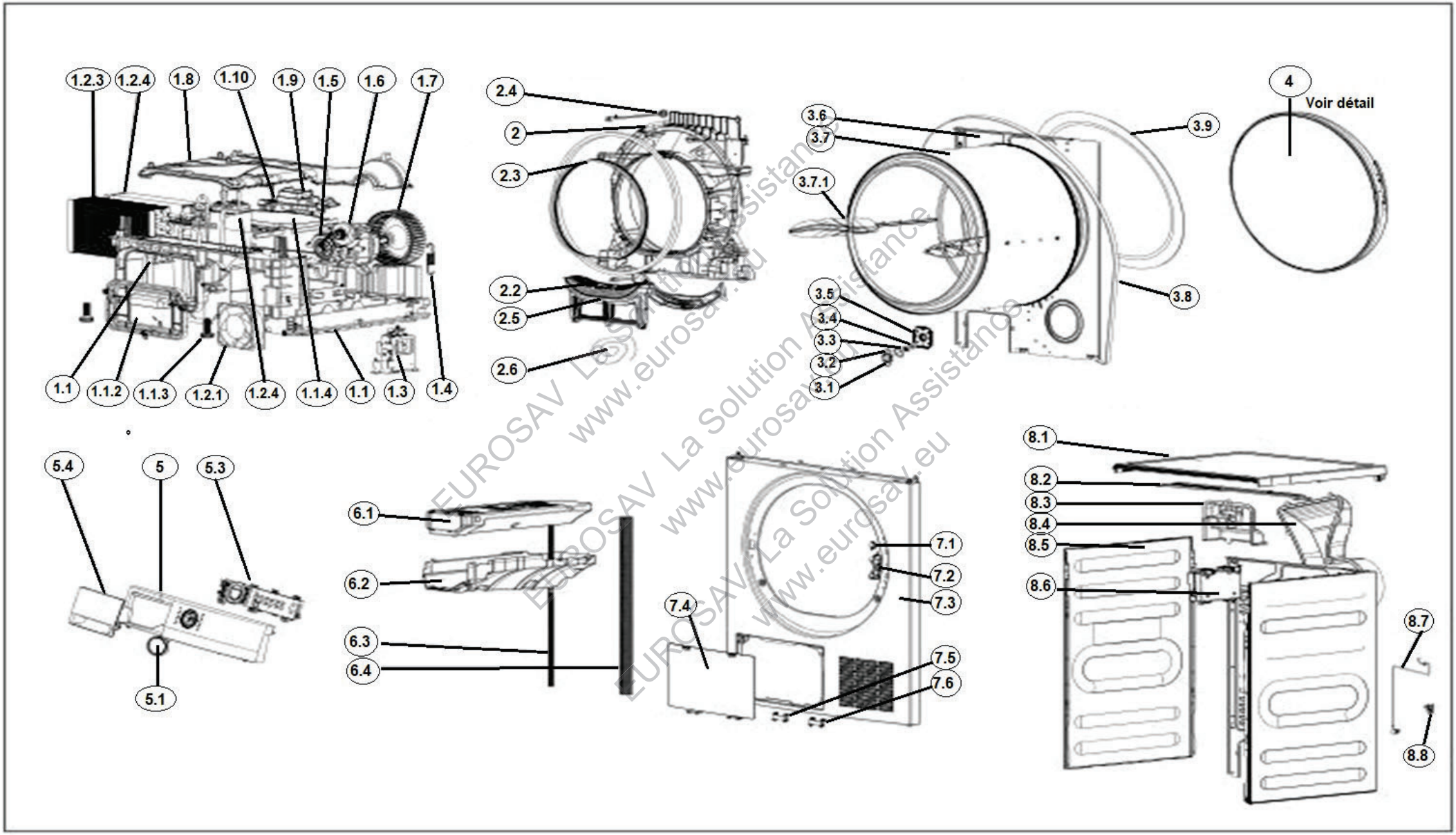

EUROSAV La Solution Assistance
www.eurosav.eu