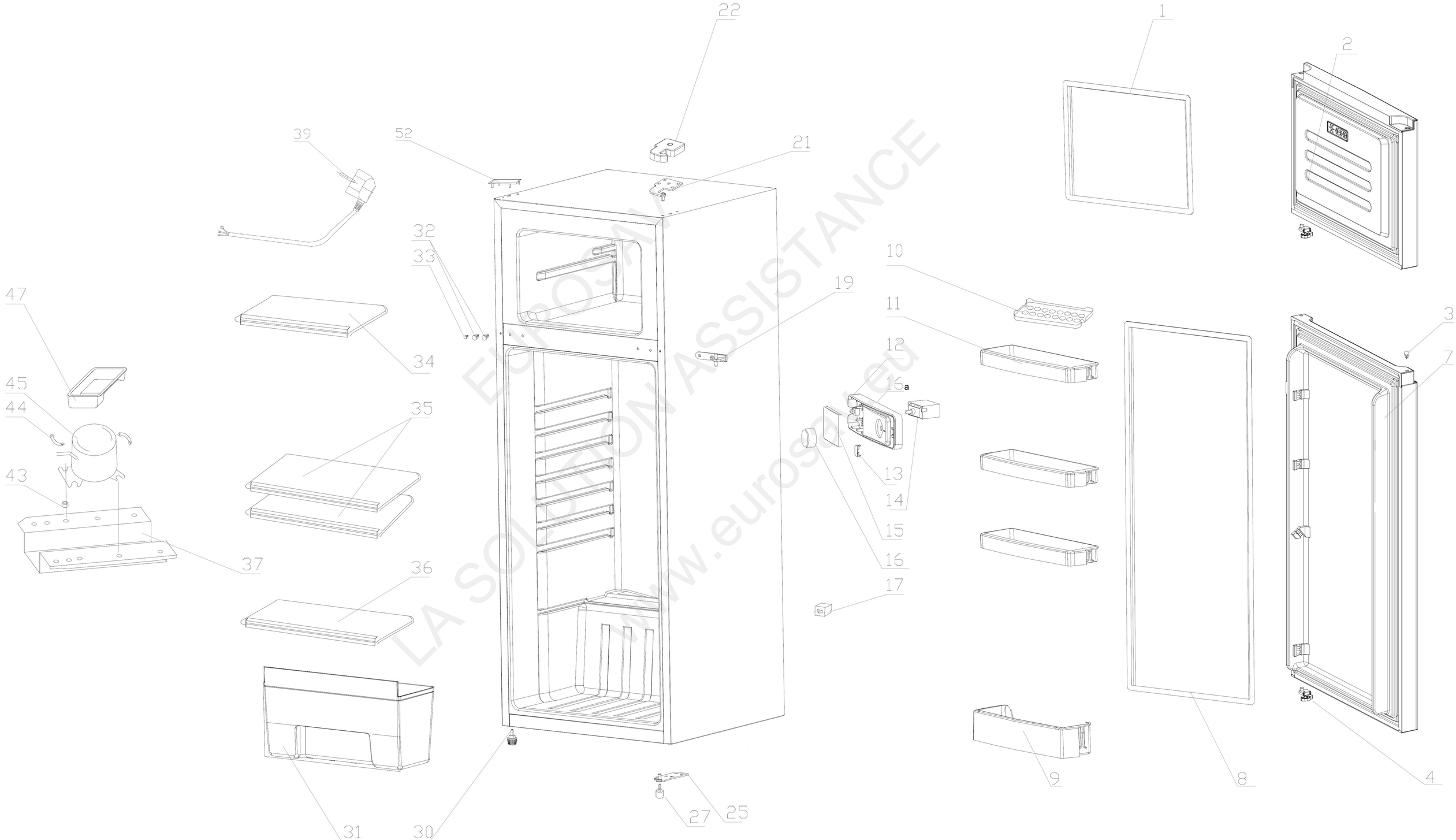

EUROSAV
LA SOLUTION ASSISTANCE
www.eurosav.eu