SCHEMATIC DIAGRAM
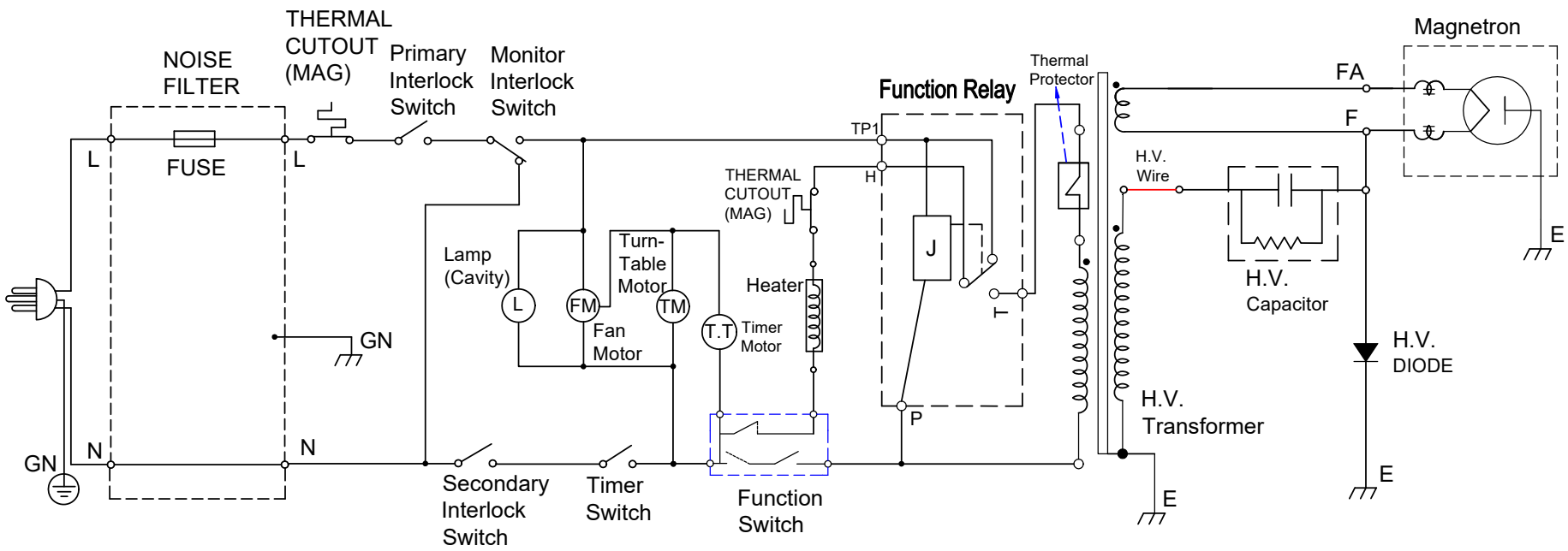
NOTE: Door is opened