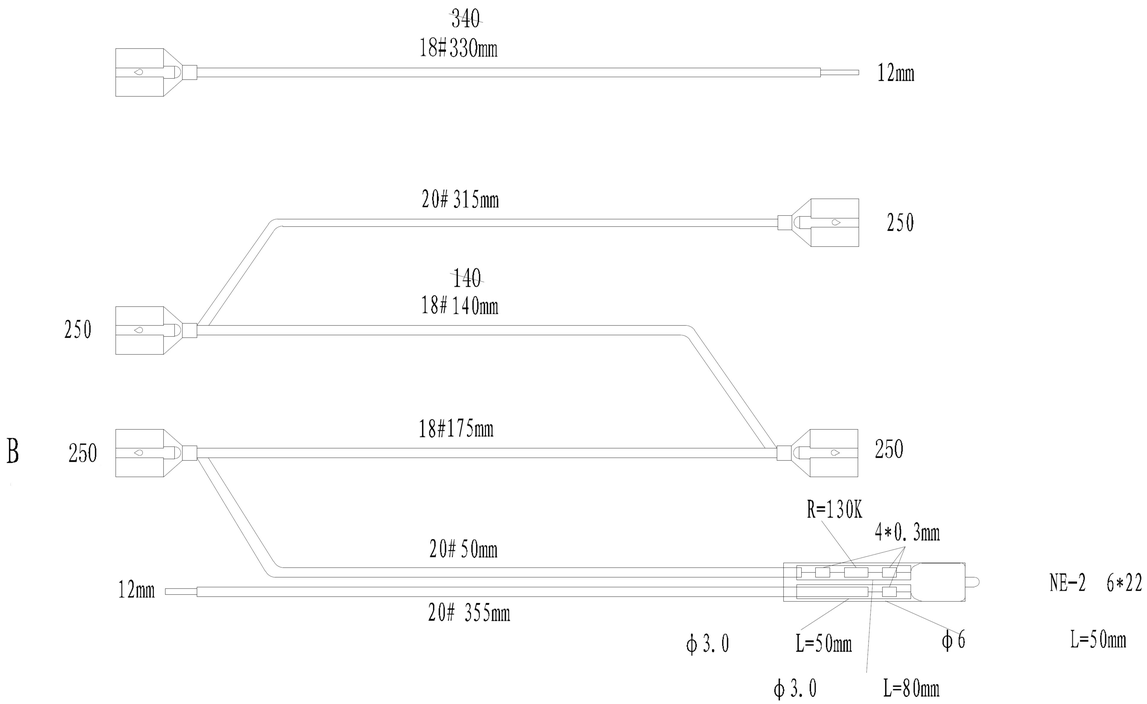
340
18#330mm
12mm
20# 315mm
250
140
18# 140mm
250
B
250
18#175mm
250
R=130K
4*0. 3mm
20# 50mm
12mm
20# 355mm
NE-2 6*22
ϕ3. 0
L=50mm
ϕ6
L=50mm
ϕ3. 0
L=80mm

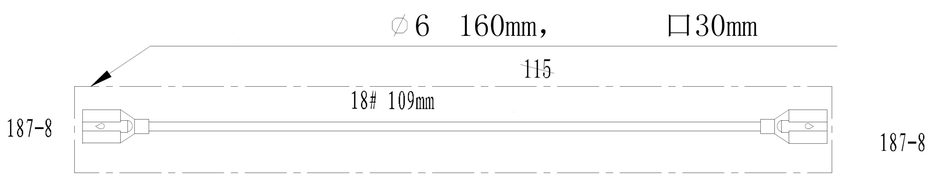
∅6 160mm, 口30mm
115
18# 109mm
187-8
187-8

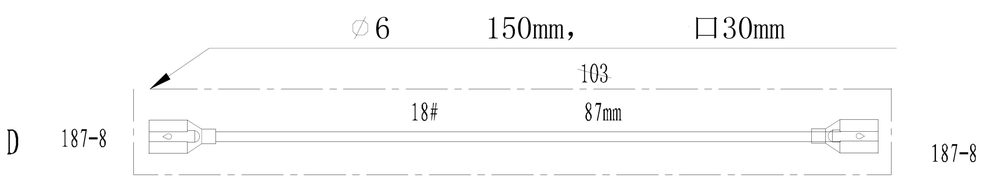
∅6 150mm, 口30mm
103
18# 87mm
D
187-8
187-8

250
20# 180mm
3
250

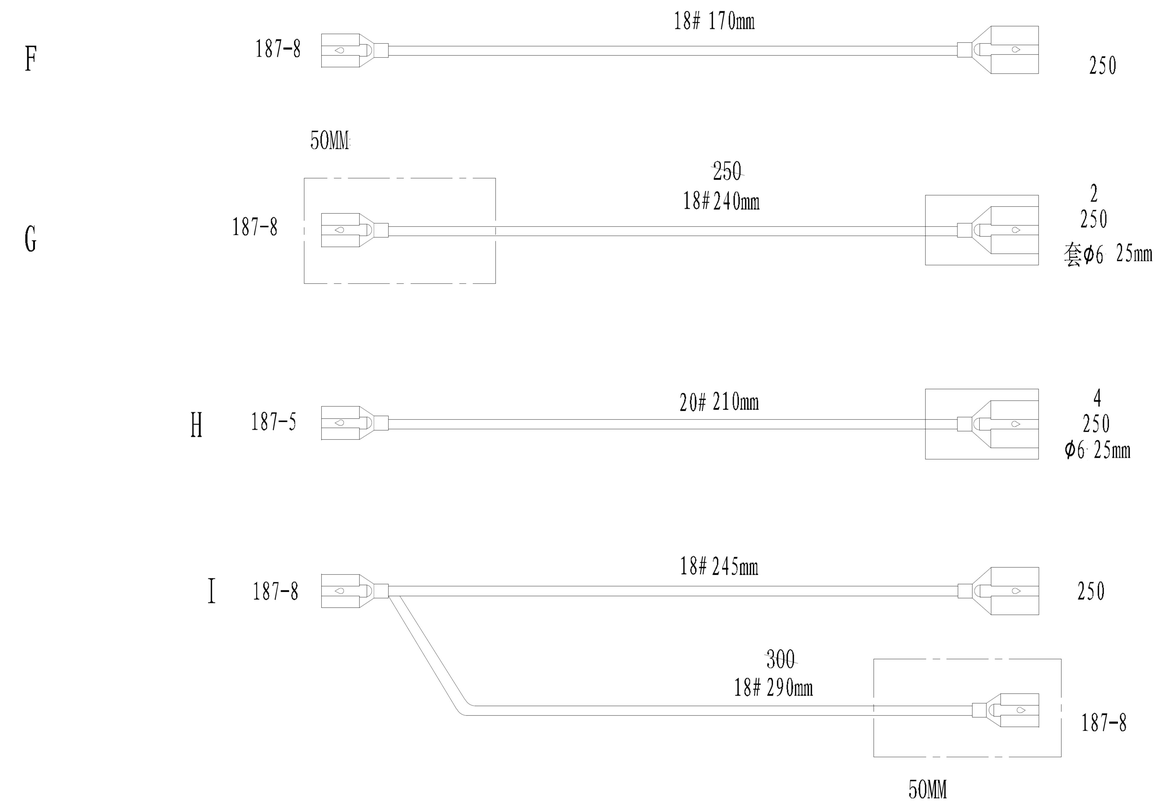
F
187-8
18# 170mm
250
50MM
G
187-8
250
18# 240mm
2
250
套ϕ6 25mm
H
187-5
20# 210mm
4
250
ϕ6 25mm
I
187-8
18# 245mm
250
300
18# 290mm
187-8
50MM

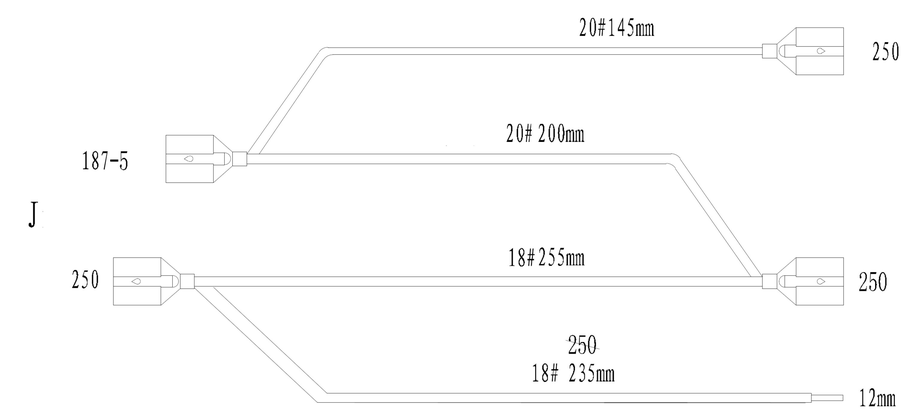
20#145mm
250
187-5
20# 200mm
J
250
18#255mm
250
250
18# 235mm
12mm

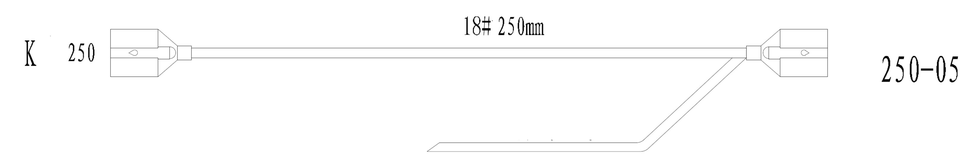
K
250
18# 250mm
250-05