PCB CONTROL

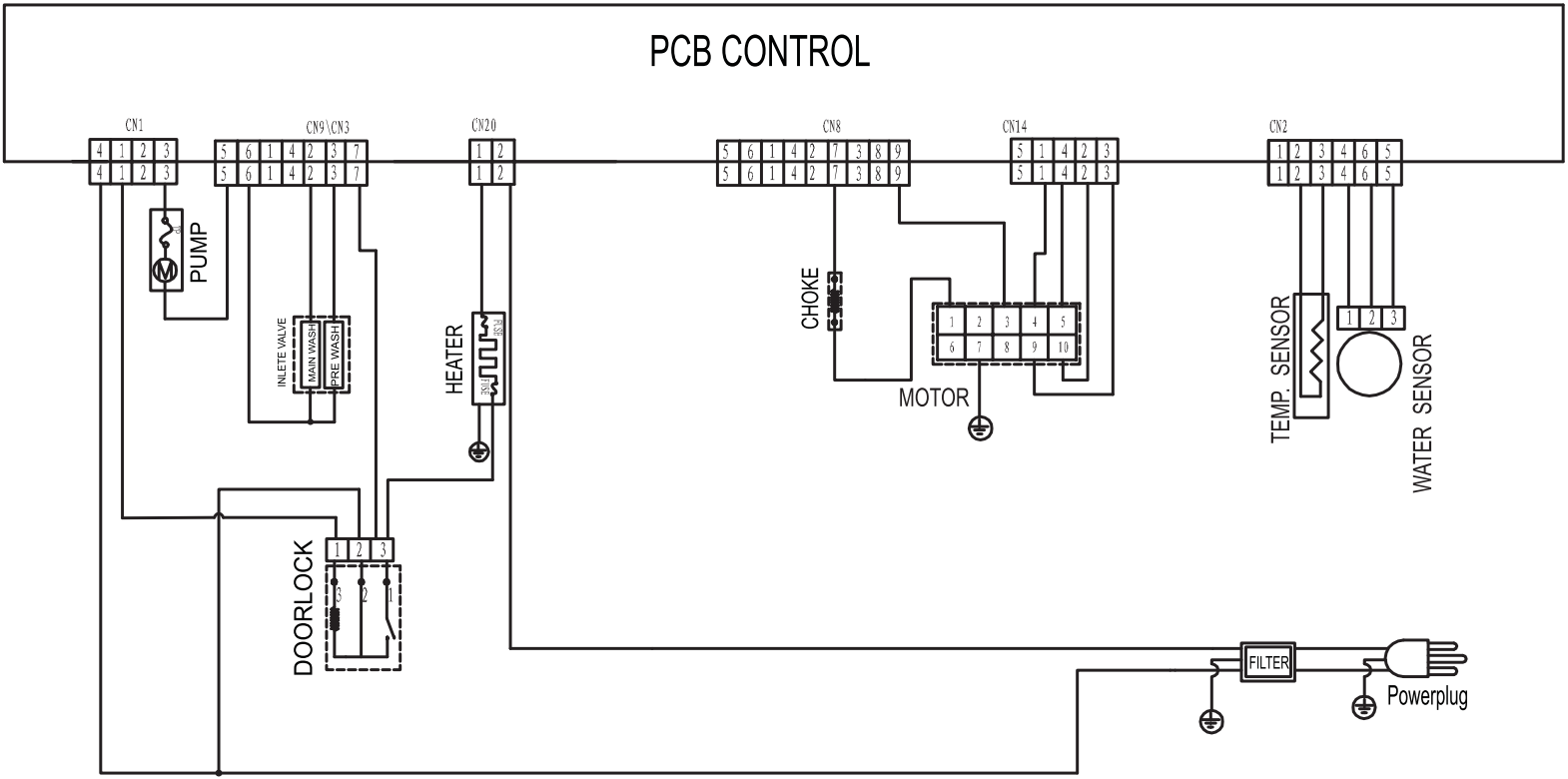
CN1
CN9\CN3
CN20
CN8
CN14
CN2
PUMP
INLETE VALVE
MAIN WASH
PRE WASH
HEATER
CHOKE
MOTOR
TEMP. SENSOR
WATER SENSOR
DOORLOCK
FILTER
Powerplug