PCB CONTROL

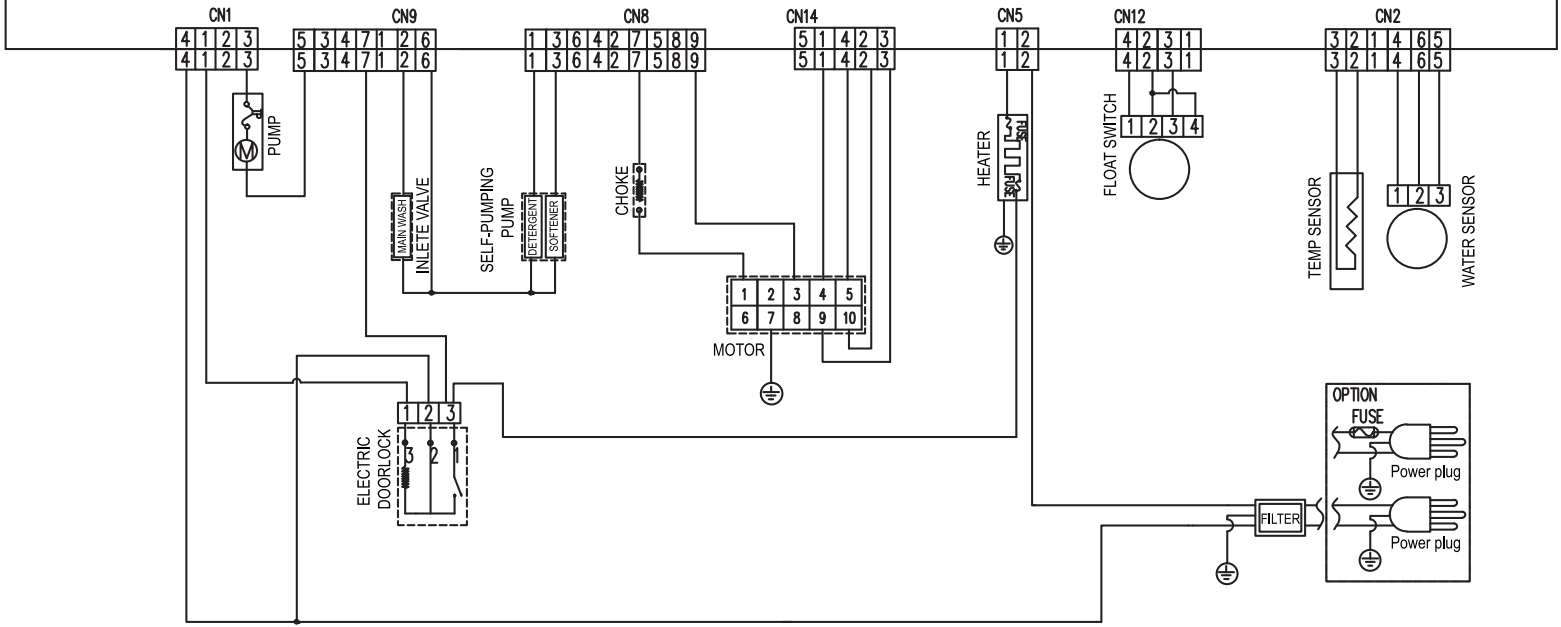
CN1
CN9
CN8
CN14
CN5
CN12
CN2
PUMP
MAIN WASH
INLETE VALVE
SELF-PUMPING PUMP
DETERGENT
SOFTENER
CHOKE
MOTOR
HEATER
FUSE
FLOAT SWITCH
TEMP SENSOR
WATER SENSOR
ELECTRIC DOORLOCK
OPTION
FUSE
Power plug
Power plug
FILTER