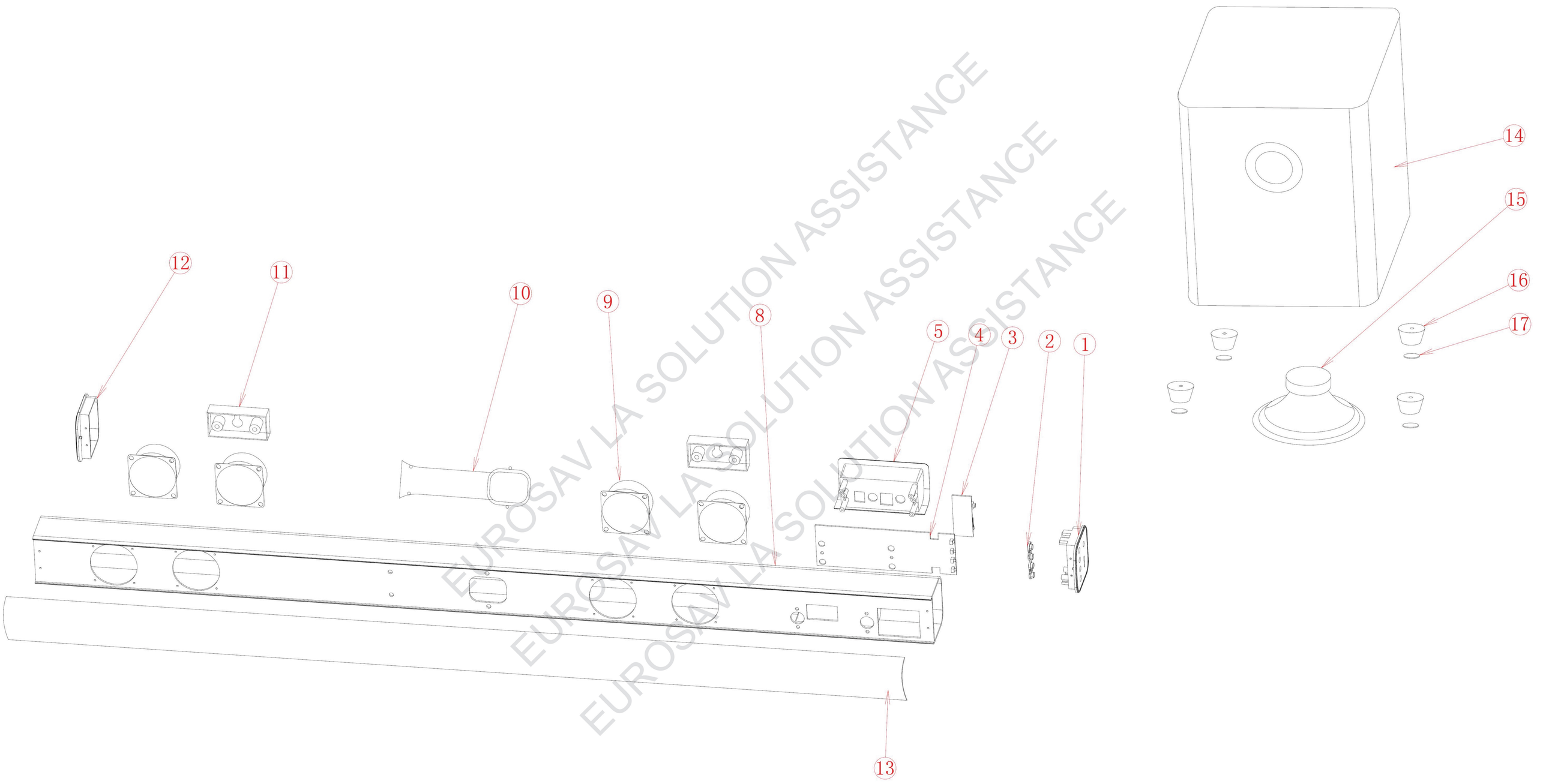

EUROSAV LA SOLUTION ASSISTANCE
EUROSAV LA SOLUTION ASSISTANCE
EUROSAV LA SOLUTION ASSISTANCE