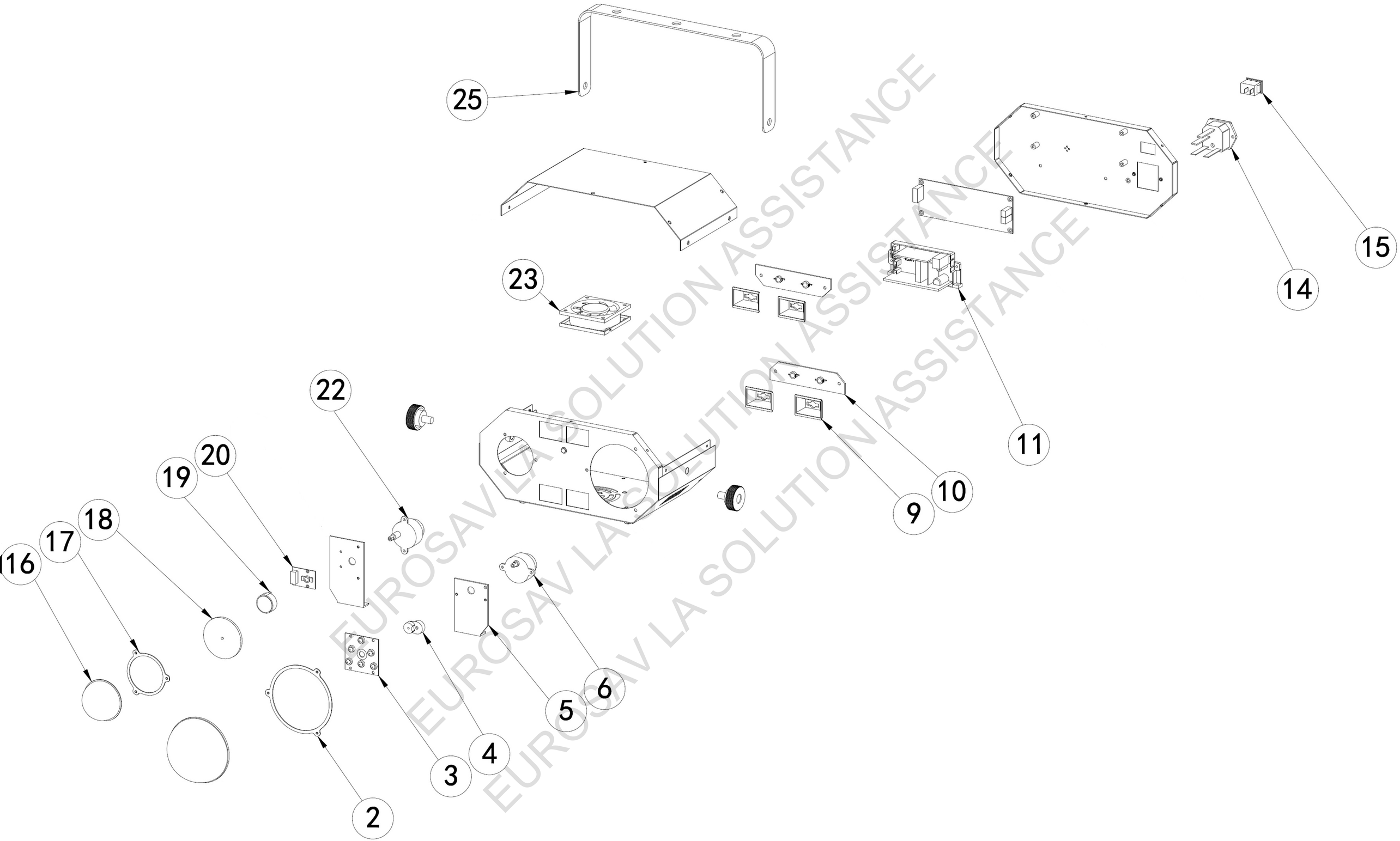

EUROSAV LA SOLUTION ASSISTANCE