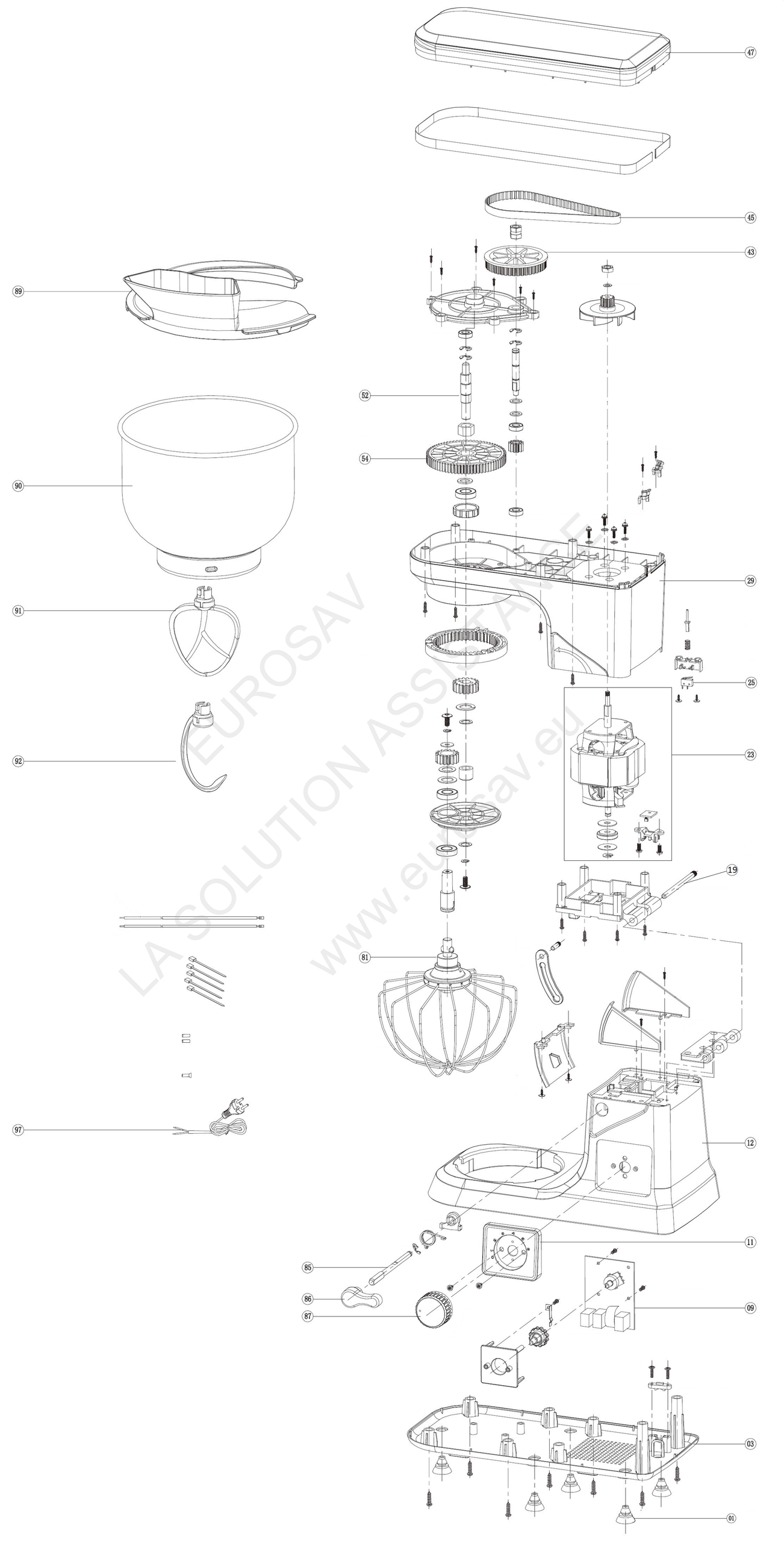

LA SOLUTION ASSISTANCE
EUROSAV
www.eurosav.eu