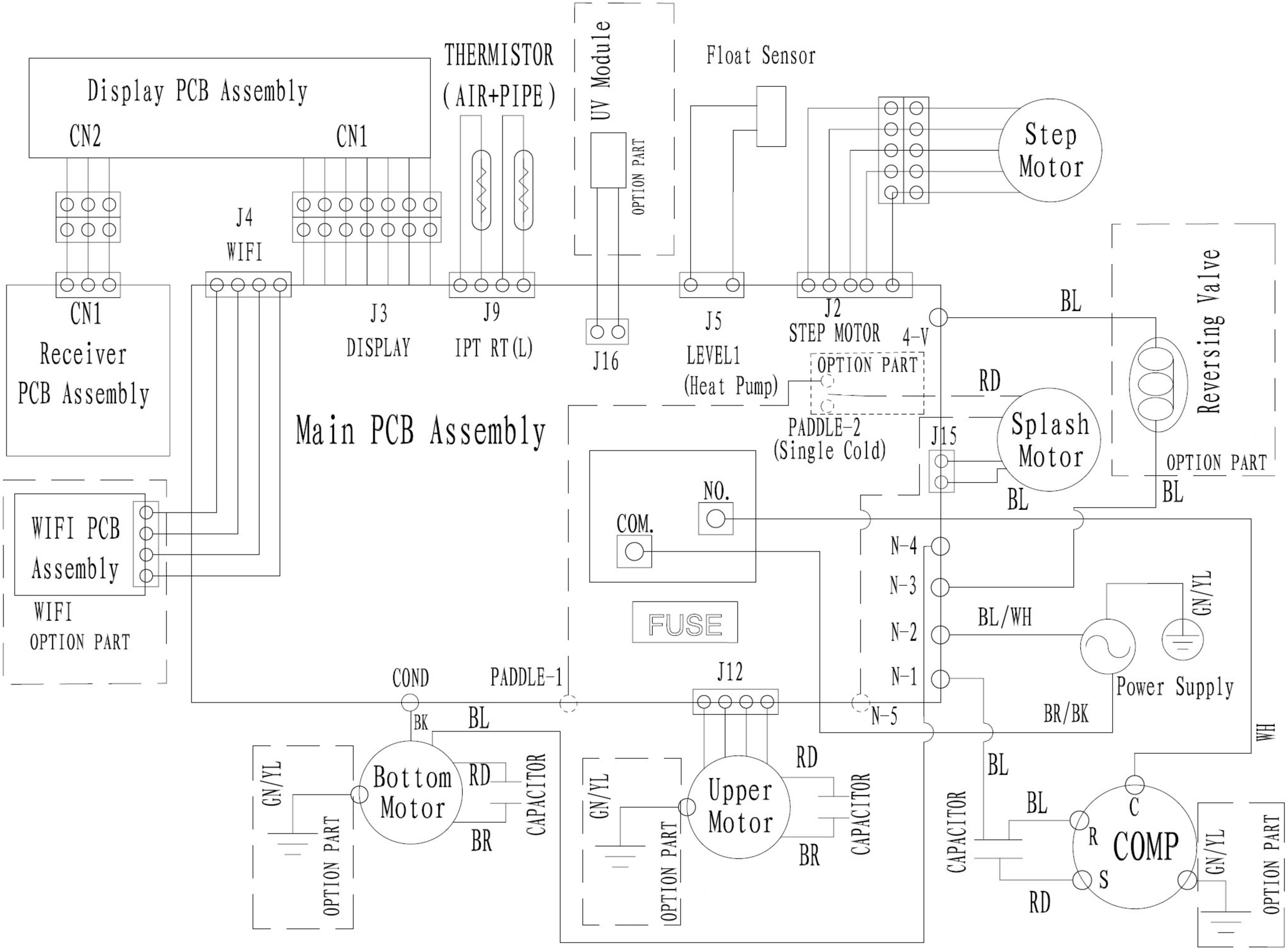
Display PCB Assembly
CN2
CN1
THERMISTOR
(AIR+PIPE)
UV Module
OPTION PART
Float Sensor
Step
Motor
J4
WIFI
CN1
Receiver
PCB Assembly
J3
DISPLAY
J9
IPT RT(L)
J16
J5
LEVEL1
(Heat Pump)
J2
STEP MOTOR
4-V
OPTION PART
PADDLE-2
(Single Cold)
BL
Reversing Valve
RD
Main PCB Assembly
J15
Splash
Motor
OPTION PART
BL
BL
WIFI PCB
Assembly
WIFI
OPTION PART
NO.
COM.
N-4
N-3
N-2
N-1
N-5
FUSE
BL/WH
GN/YL
Power Supply
BR/BK
COND
PADDLE-1
J12
BK
BL
WH
GN/YL
Bottom
Motor
RD
BR
CAPACITOR
OPTION PART
GN/YL
Upper
Motor
RD
BR
CAPACITOR
OPTION PART
BL
CAPACITOR
BL
C
R
S
COMP
RD
GN/YL
OPTION PART