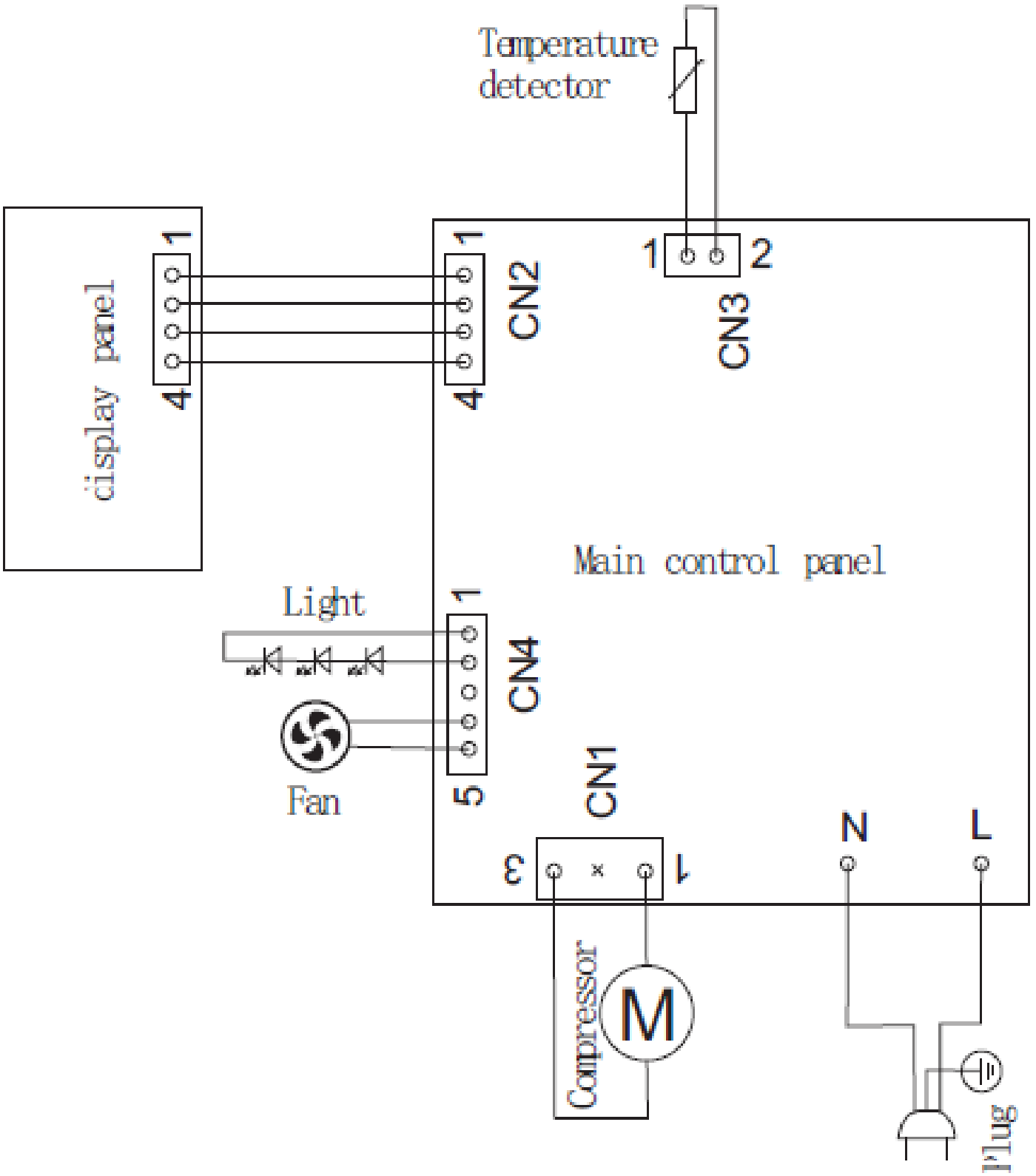
Temperature detector
1
2
CN3
CN2
1
4
1
4
cisplay panel
Main control panel
Light
CN4
1
5
Fan
CN1
3
1
N
L
Compressor
M
Plug