PCB CONTROL

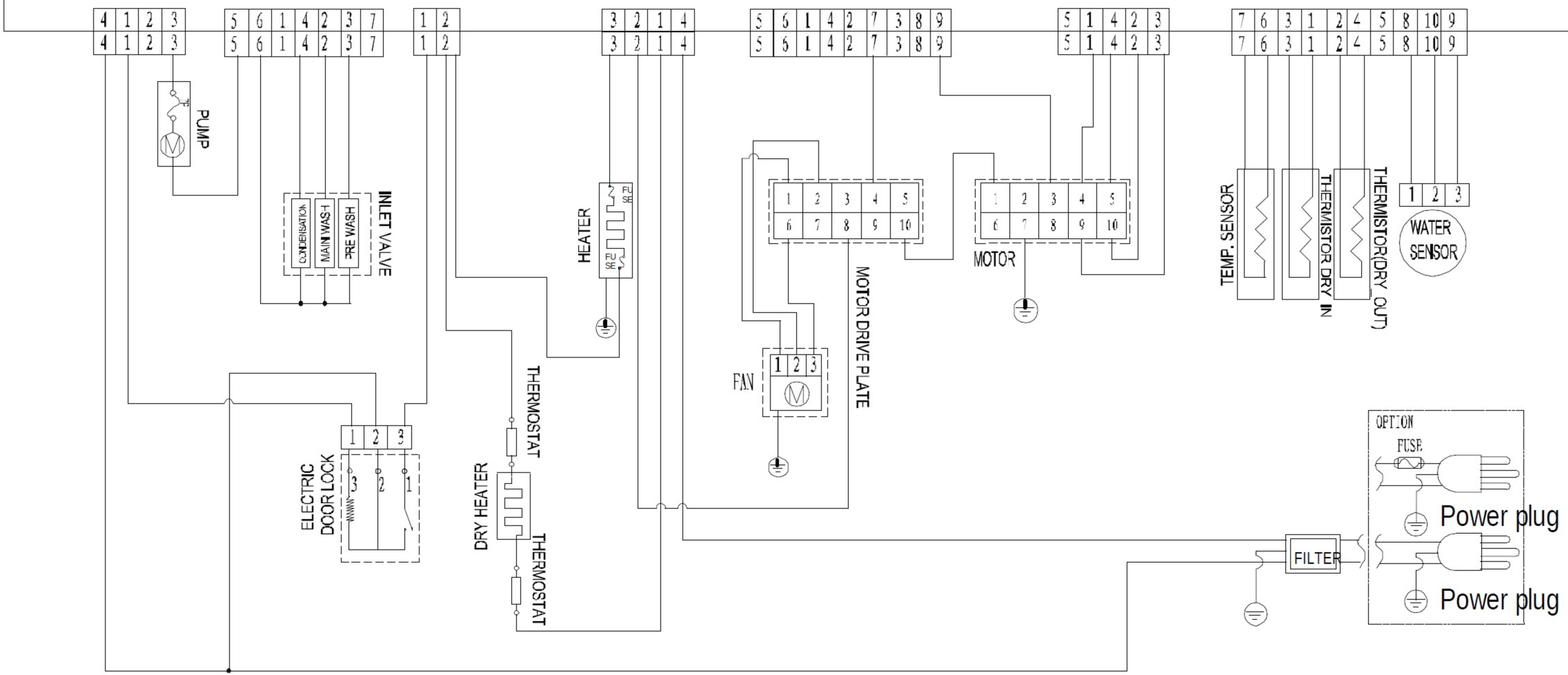
PUMP
INLET VALVE
CONDENSATION
MAIN WASH
PRE WASH
HEATER
FU SE
FU SE
MOTOR DRIVE PLATE
MOTOR
FAN
TEMP. SENSOR
THERMISTOR DRY IN
THERMISTOR(DRY OUT)
WATER SENSOR
ELECTRIC DOOR LOCK
THERMOSTAT
DRY HEATER
THERMOSTAT
FILTER
OPTION
FUSE
Power plug
Power plug