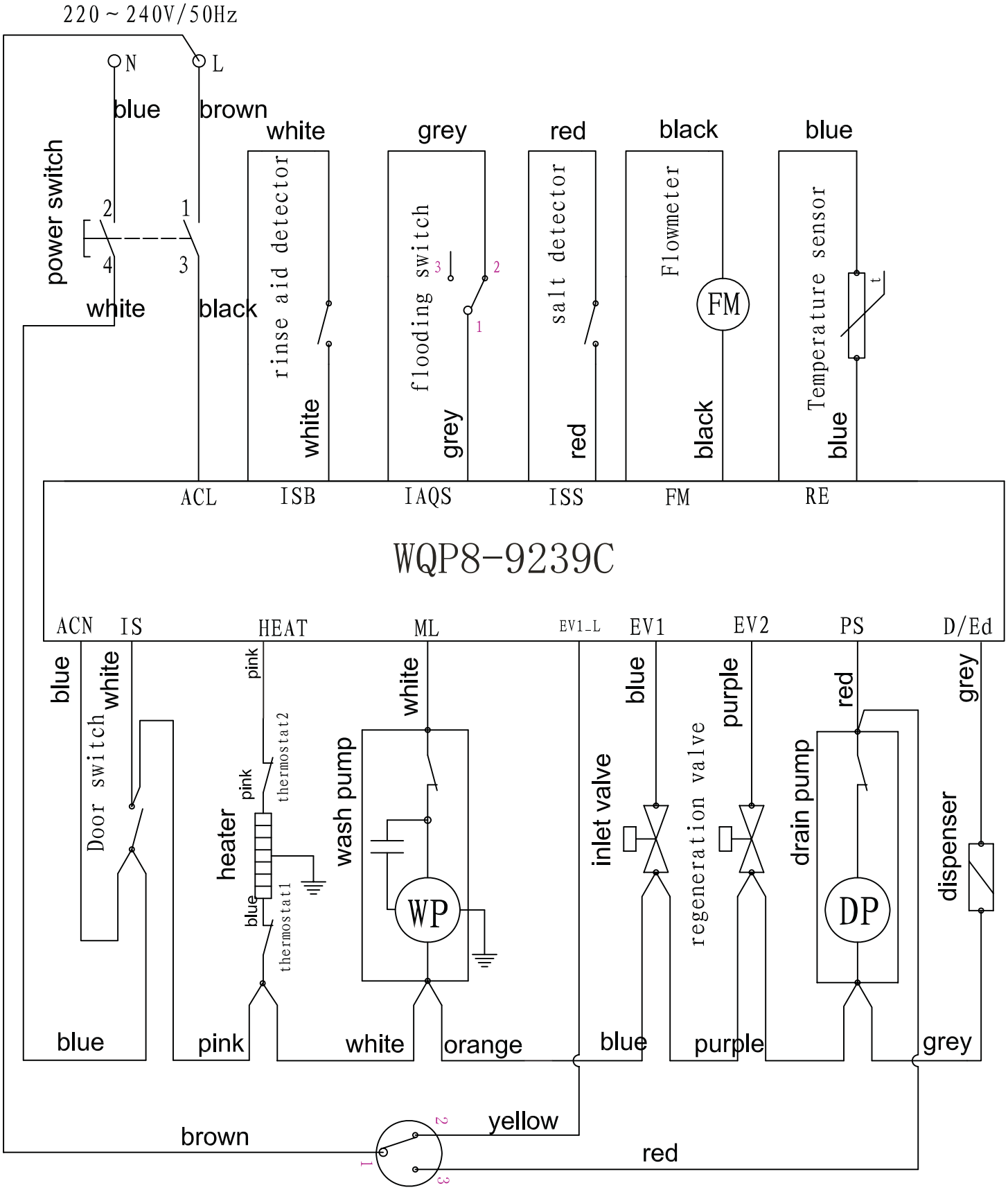
220~240V/50Hz
N
L
blue
brown
power switch
2
1
4
3
white
black
white
rinse aid detector
white
grey
flooding switch
grey
red
salt detector
red
black
Flowmeter
FM
black
blue
Temperature sensor
blue
ACL
ISB
IAQS
ISS
FM
RE
WQP8-9239C
ACN
IS
HEAT
ML
EV1_L
EV1
EV2
PS
D/Ed
blue
white
Door switch
pink
thermostat2
pink
heater
blue
thermostat1
white
wash pump
WP
inlet valve
blue
regeneration valve
purple
red
drain pump
DP
grey
dispenser
blue
pink
white
orange
blue
purple
grey
brown
yellow
red