MERCURY SLAB CANOPY
SC 1100
UP TO SERIAL No MO00011906

DSL0462 P01

DATE 16.03.15 ISSUE STATUS 002

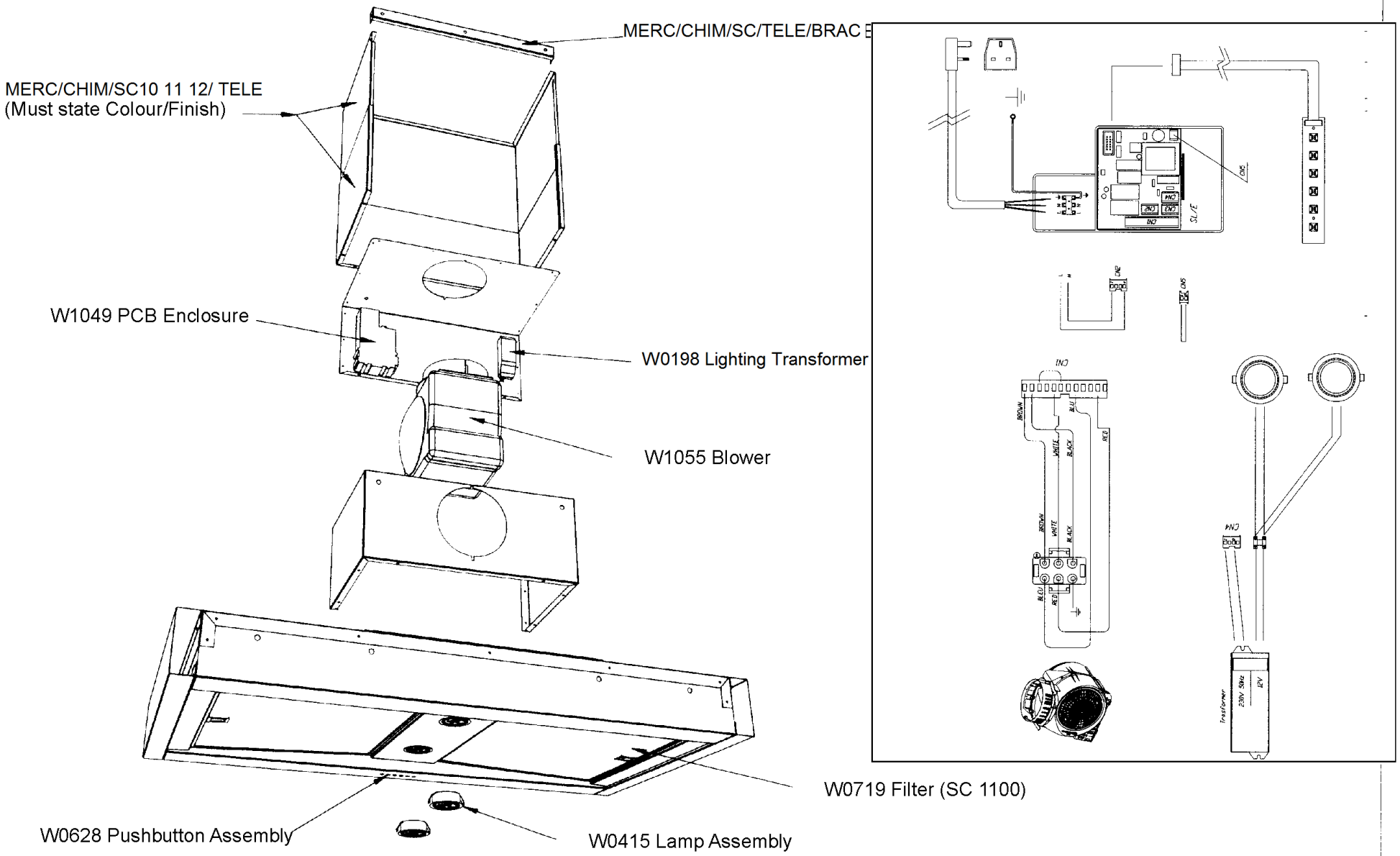

Client: Aga Rangemaster	Drawn by: M Sharpe	Approved by: Date:	Units: mm	Scale: 1:10	Paper Size: A3
W S Westin Ltd., Leeds Road, Huddersfield, HD1 6NG, United Kingdom	Title: SC 3D Exploded 07-06-10				Date: 02-06-10

MERCURY SLAB CANOPY
SC 1100
FROM SERIAL No MO00011907

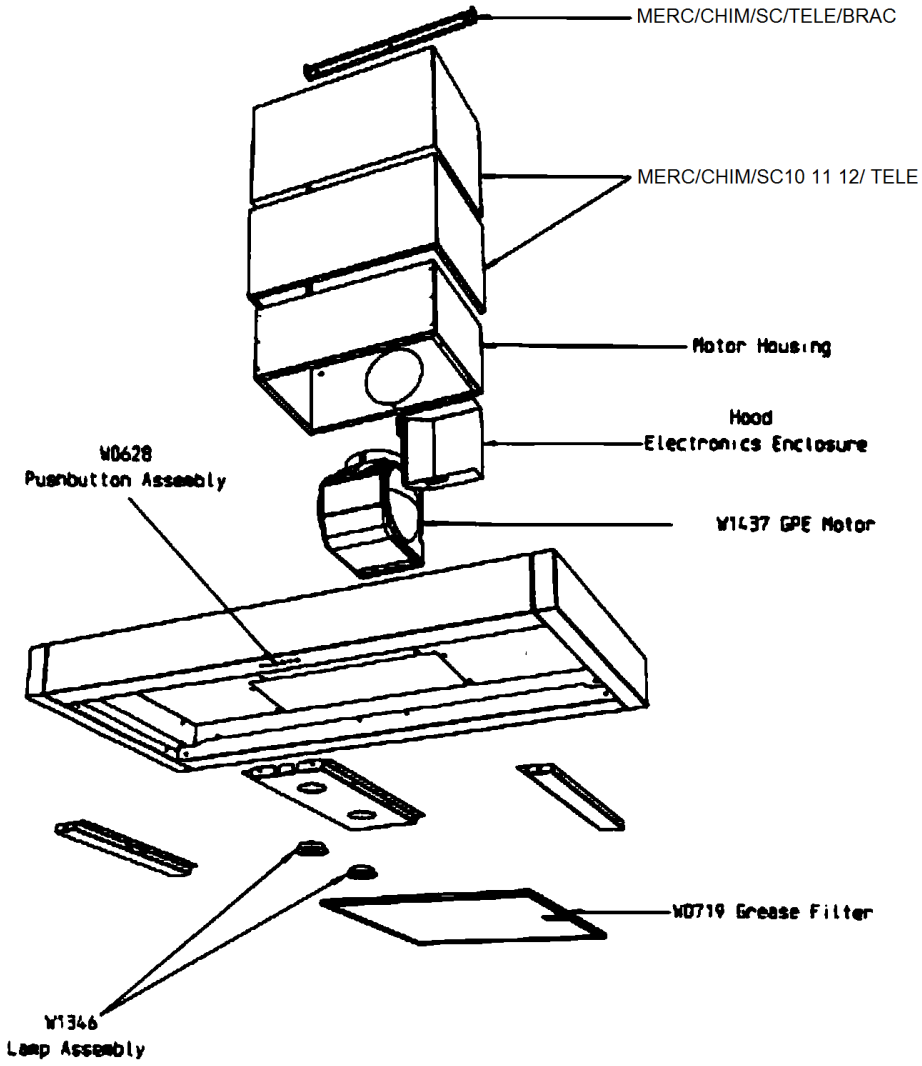

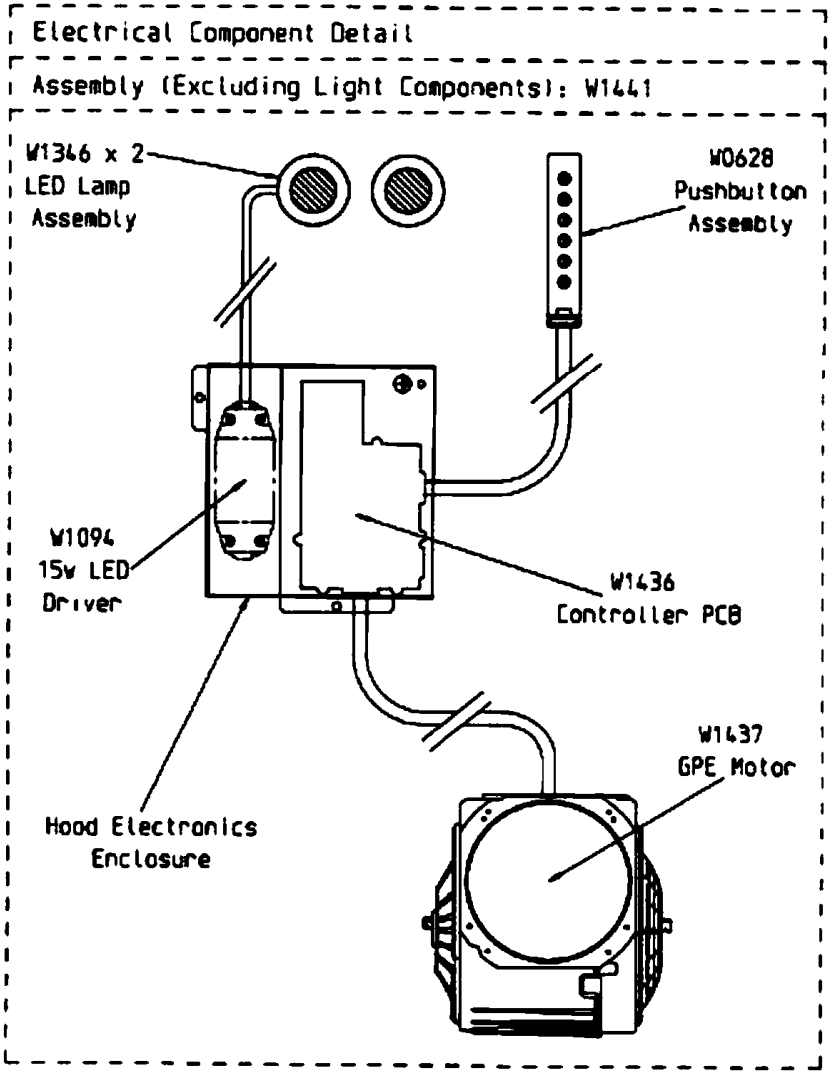

DSL0462 P03

DATE 16.03.15 ISSUE STATUS 001