MERCURY PITCH CANOPY
PC 1000
UP TO SERIAL No MO0001906

DSL0444 P01

DATE 13.03.15 ISSUE STATUS 002

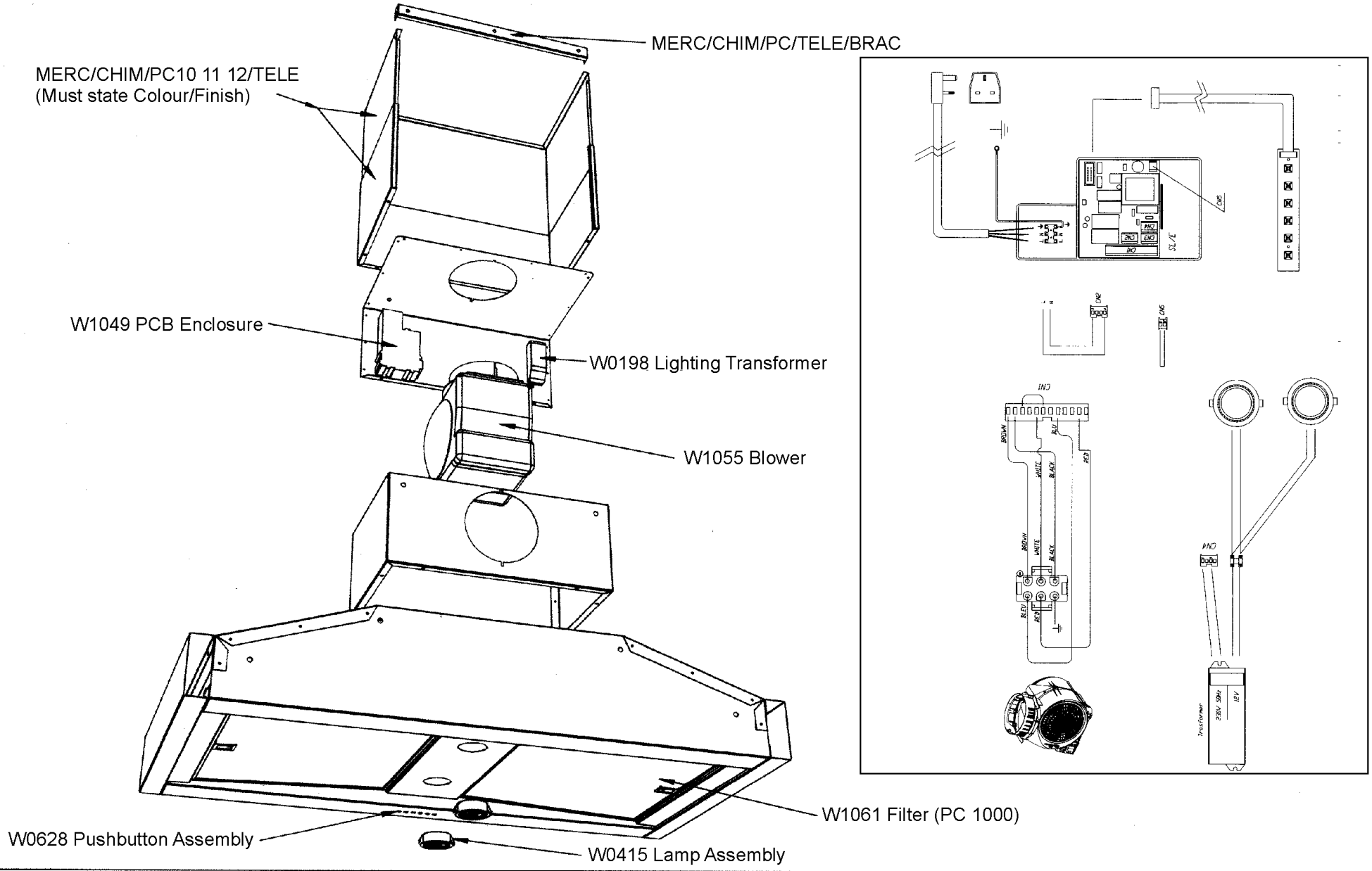

Client: Aga Rangemaster	Drawn by: M Sharpe	Approved by: Date:	Units: mm	Scale: 1:10	Paper Size: A3
W S Westin Ltd., Leeds Road, Huddersfield, HD1 6NG, United Kingdom	Title: PC 3D Exploded 07-06-10				Date: 02-06-10

MERCURY PITCH CANOPY
PC 1000
FROM SERIAL No MO00011907

DSL0444 P01A
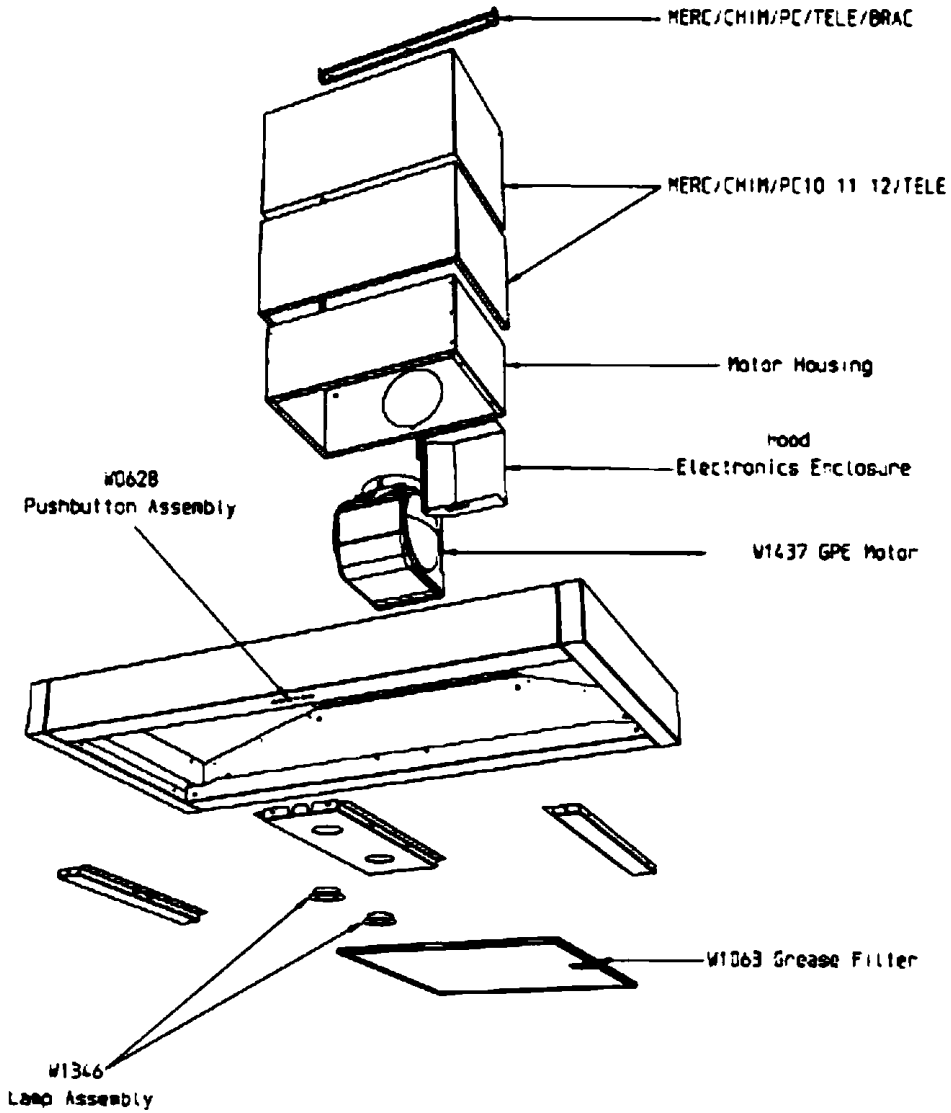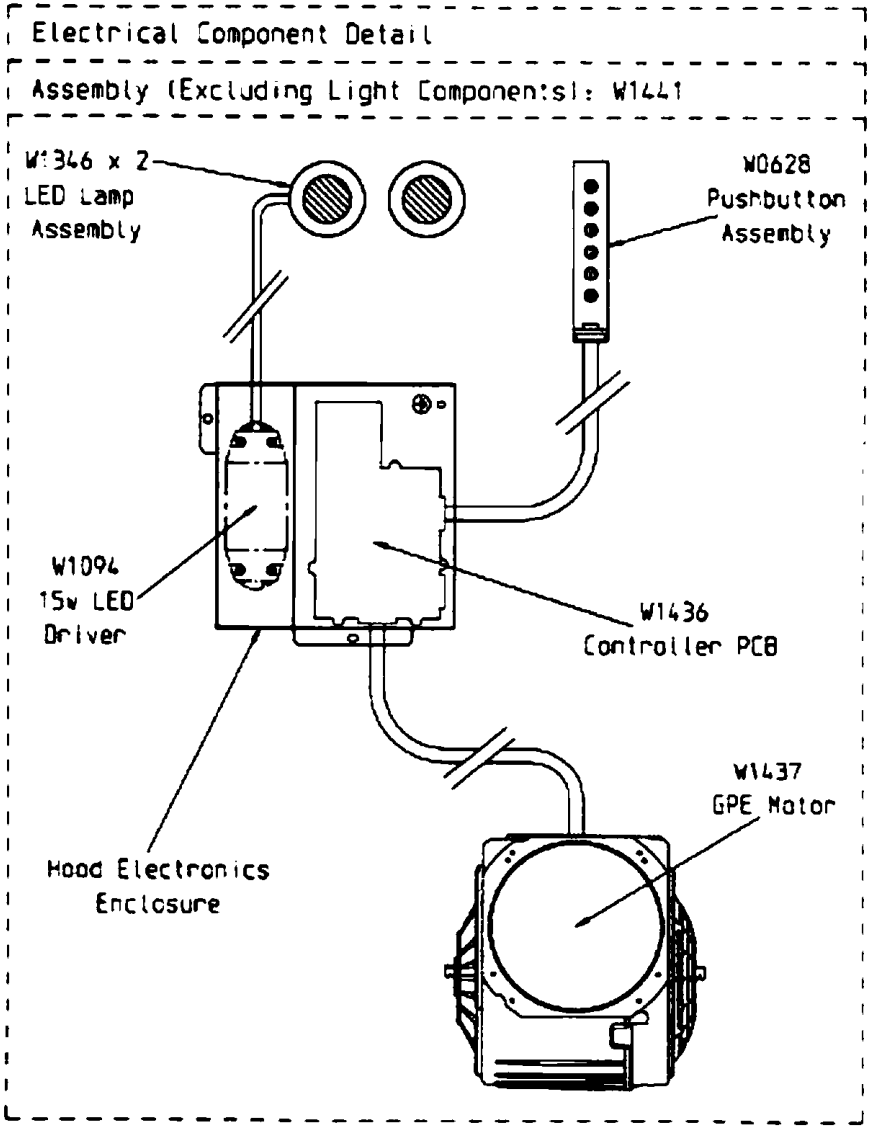
DATE 13.03.15 ISSUE STATUS 001