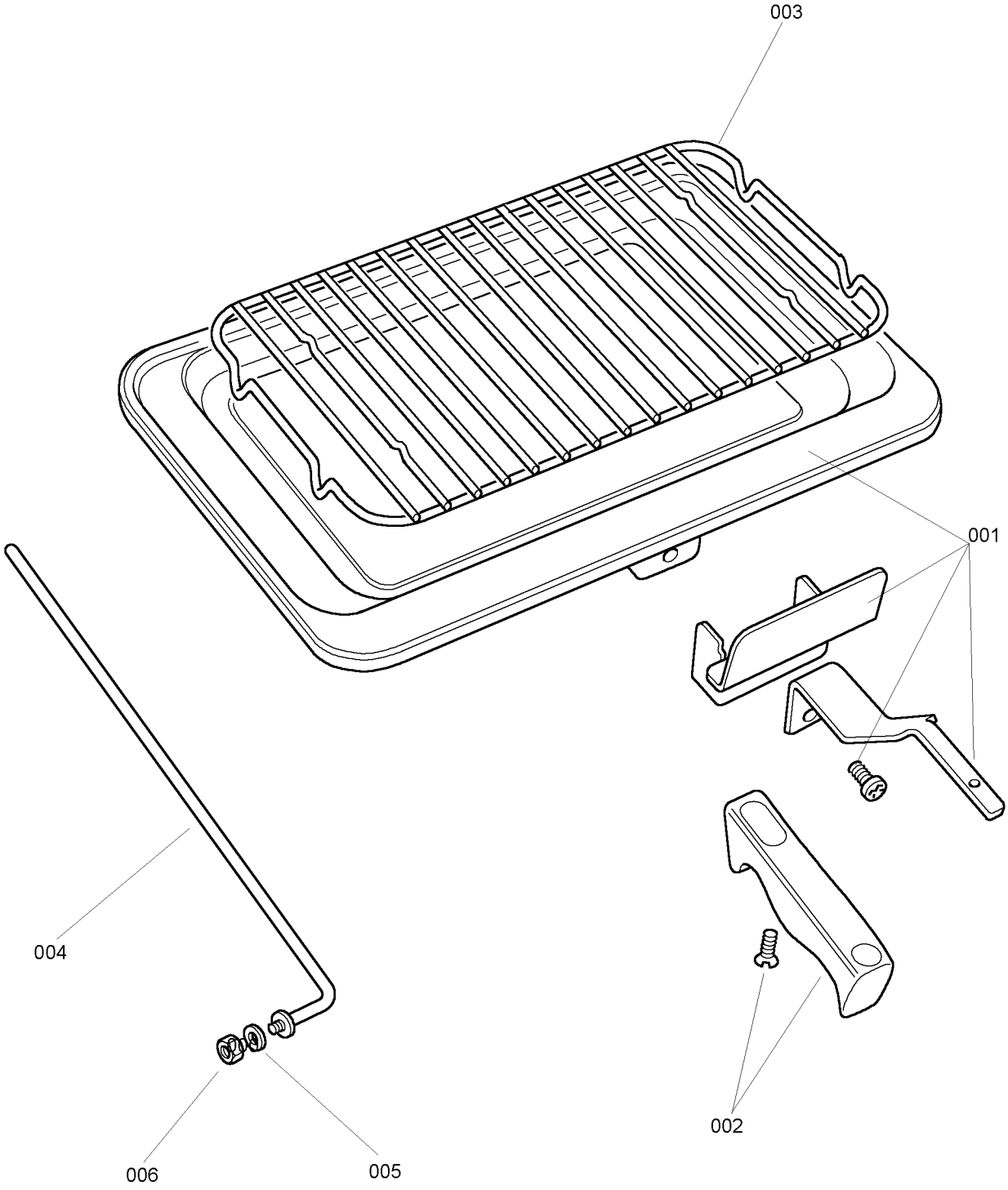
003
001
004
002
006
005

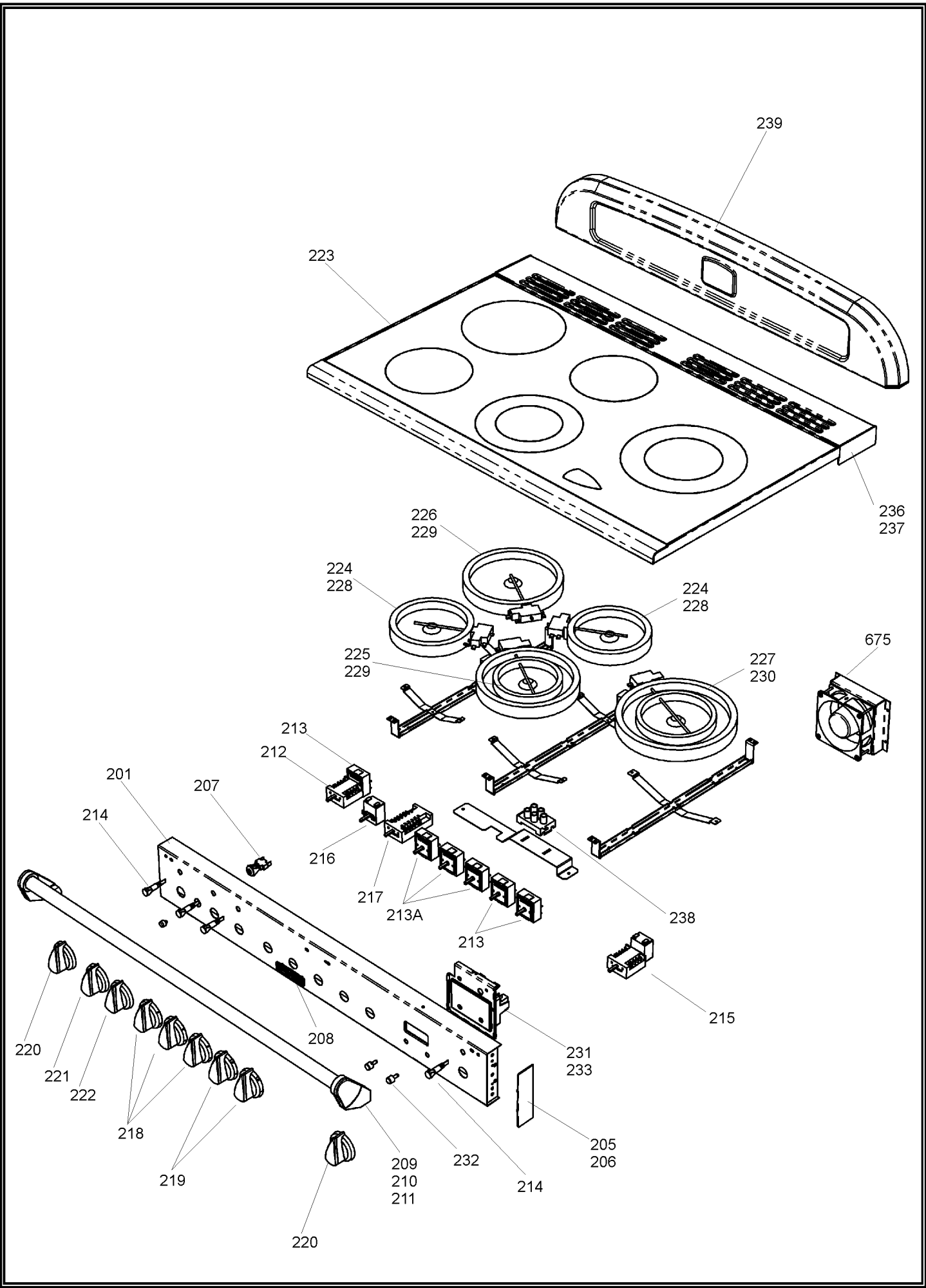
239
223
236
237
226
229
224
228
224
228
225
229
227
230
675
213
212
201
207
214
216
217
213A
213
238
215
208
220
221
222
218
219
231
233
205
206
209
210
211
232
214
220

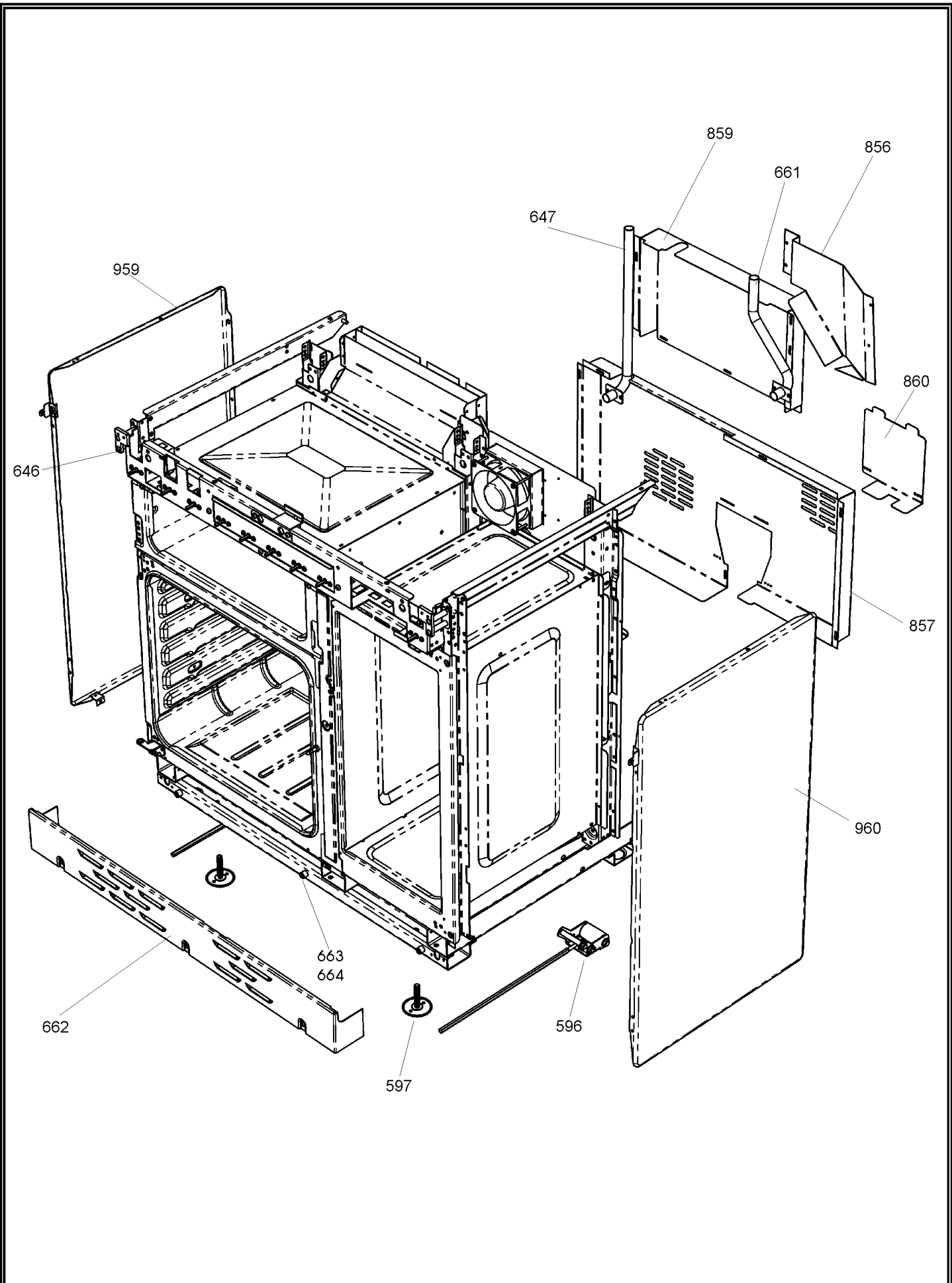
859
856
661
647
959
860
646
857
960
663
664
662
596
597

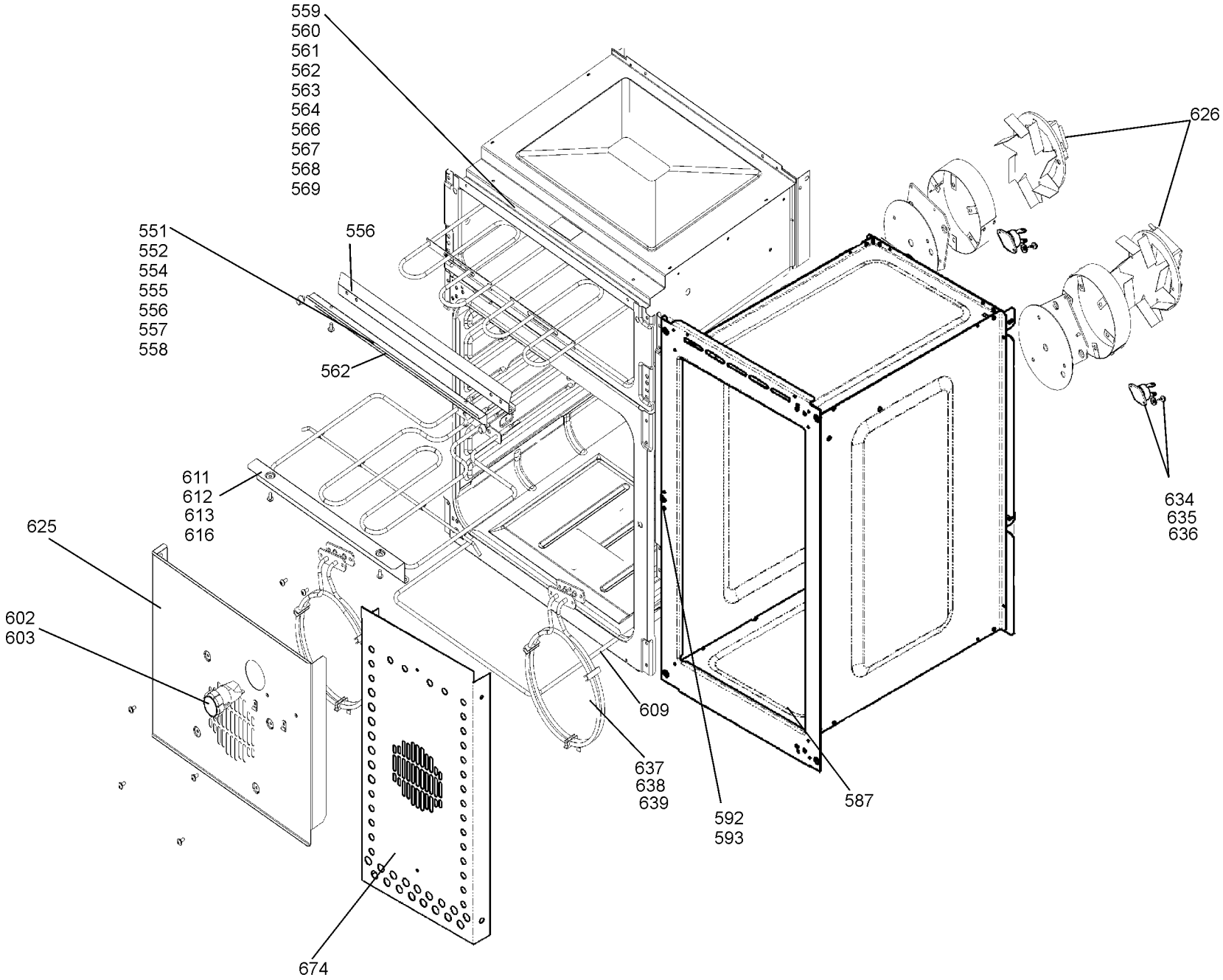
559
560
561
562
563
564
566
567
568
569
551
552
554
555
556
557
558
556
562
611
612
613
616
625
602
603
626
634
635
636
609
637
638
639
592
593
587
674

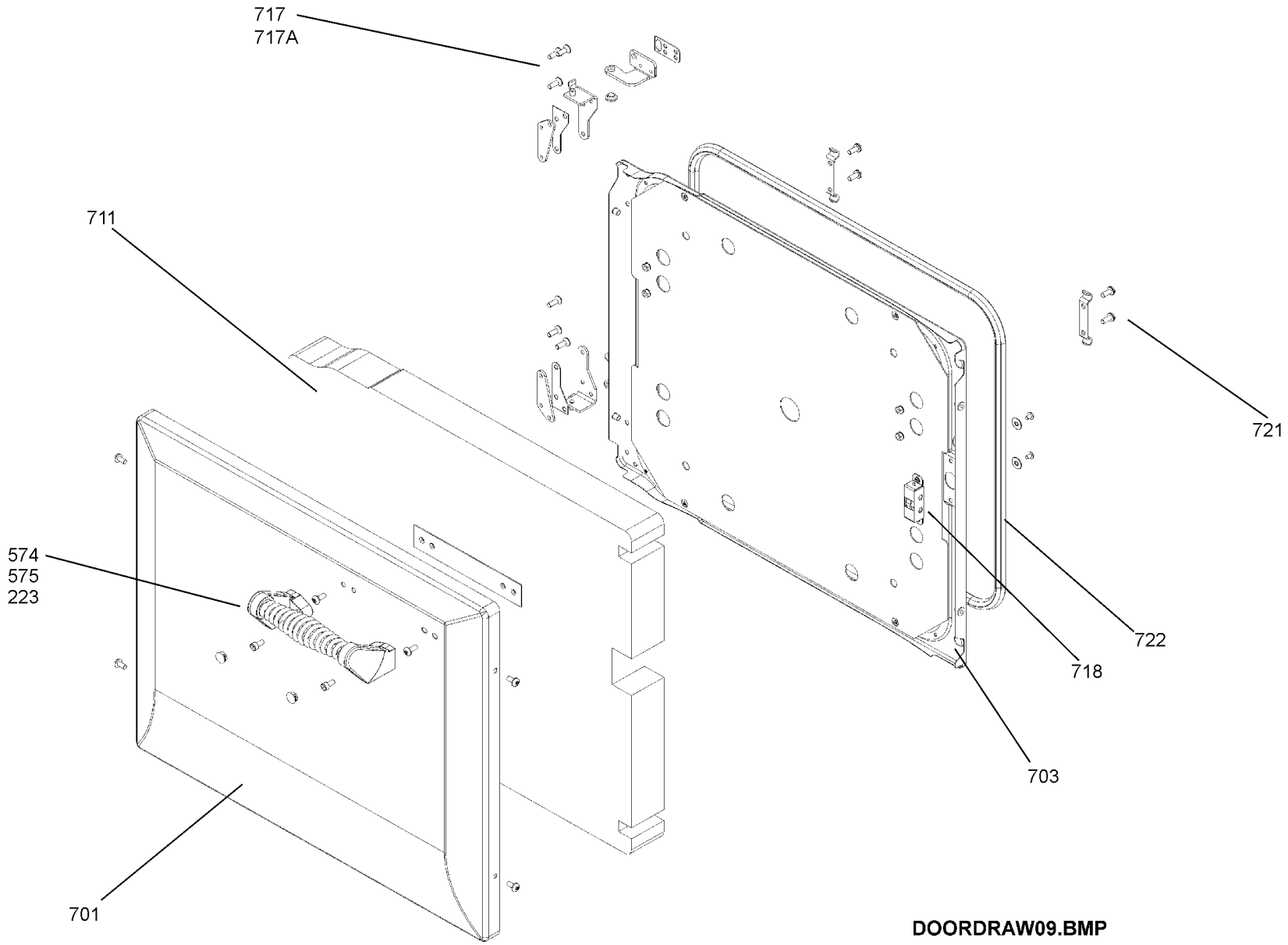
717
717A
711
721
574
575
223
722
718
703
701
DOORDRAW09.BMP

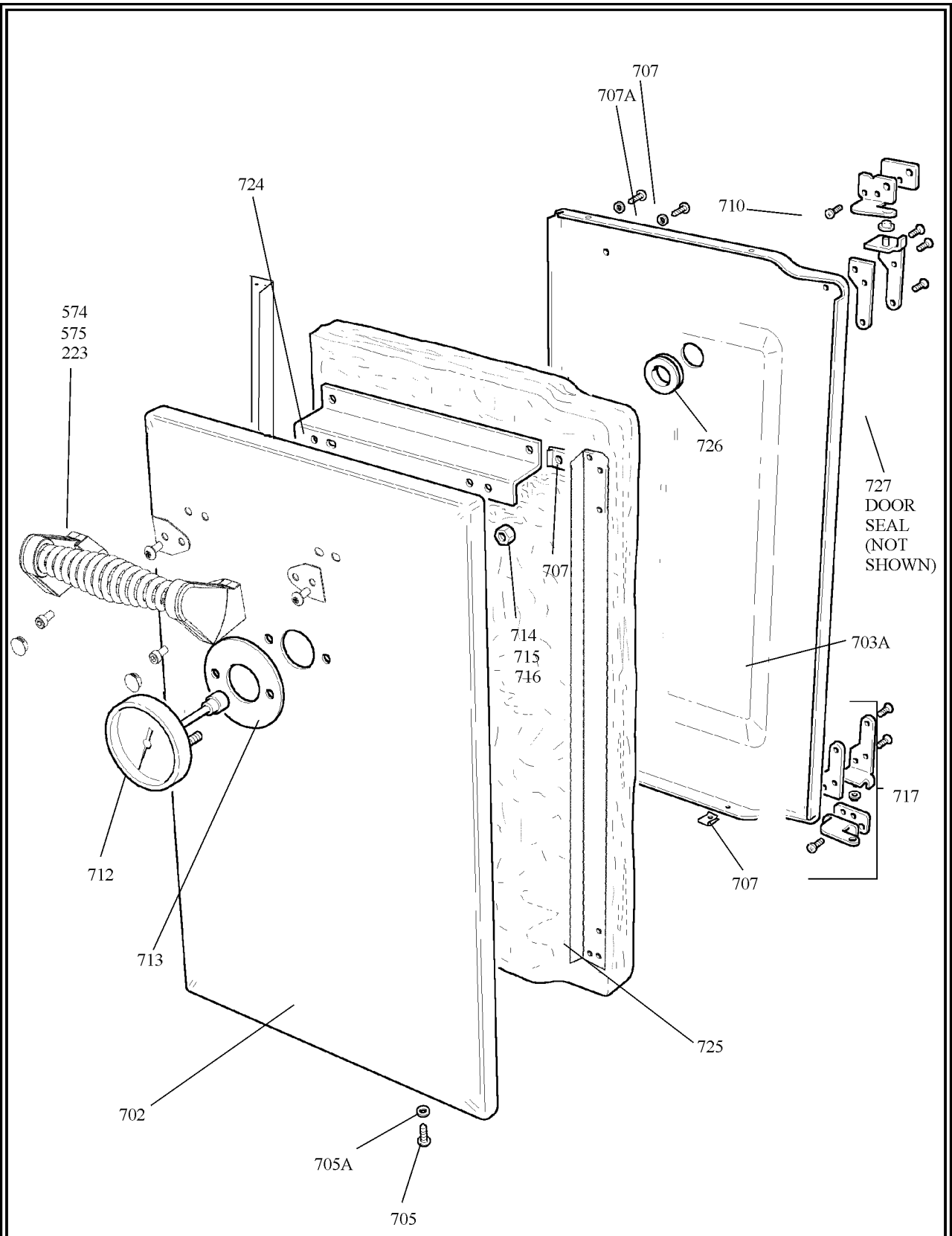
707
707A
724
710
574
575
223
726
727
DOOR
SEAL
(NOT
SHOWN)
707
714
715
716
703A
717
712
707
713
725
702
705A
705

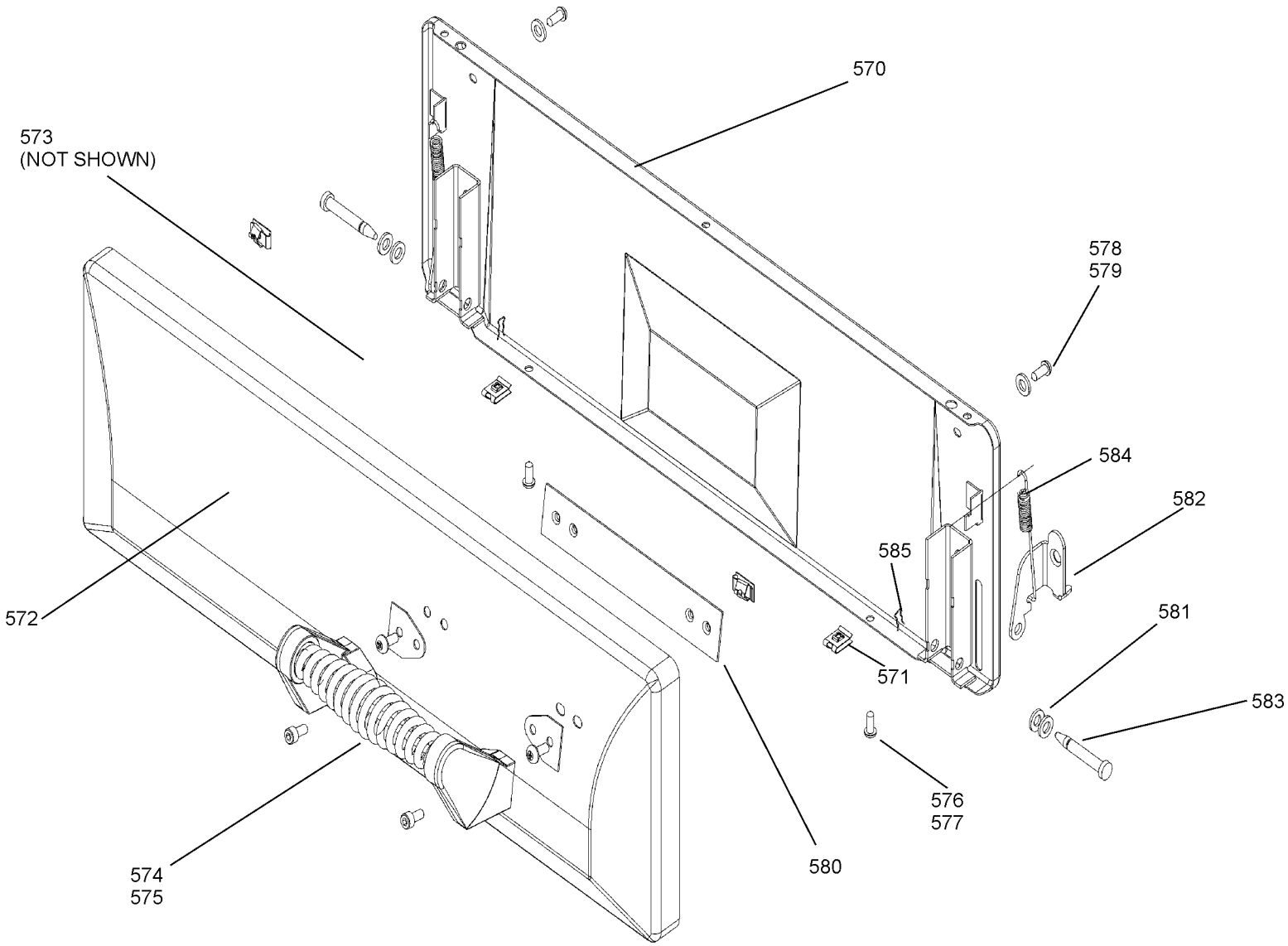
570
573
(NOT SHOWN)
578
579
584
582
585
581
572
571
583
576
577
580
574
575

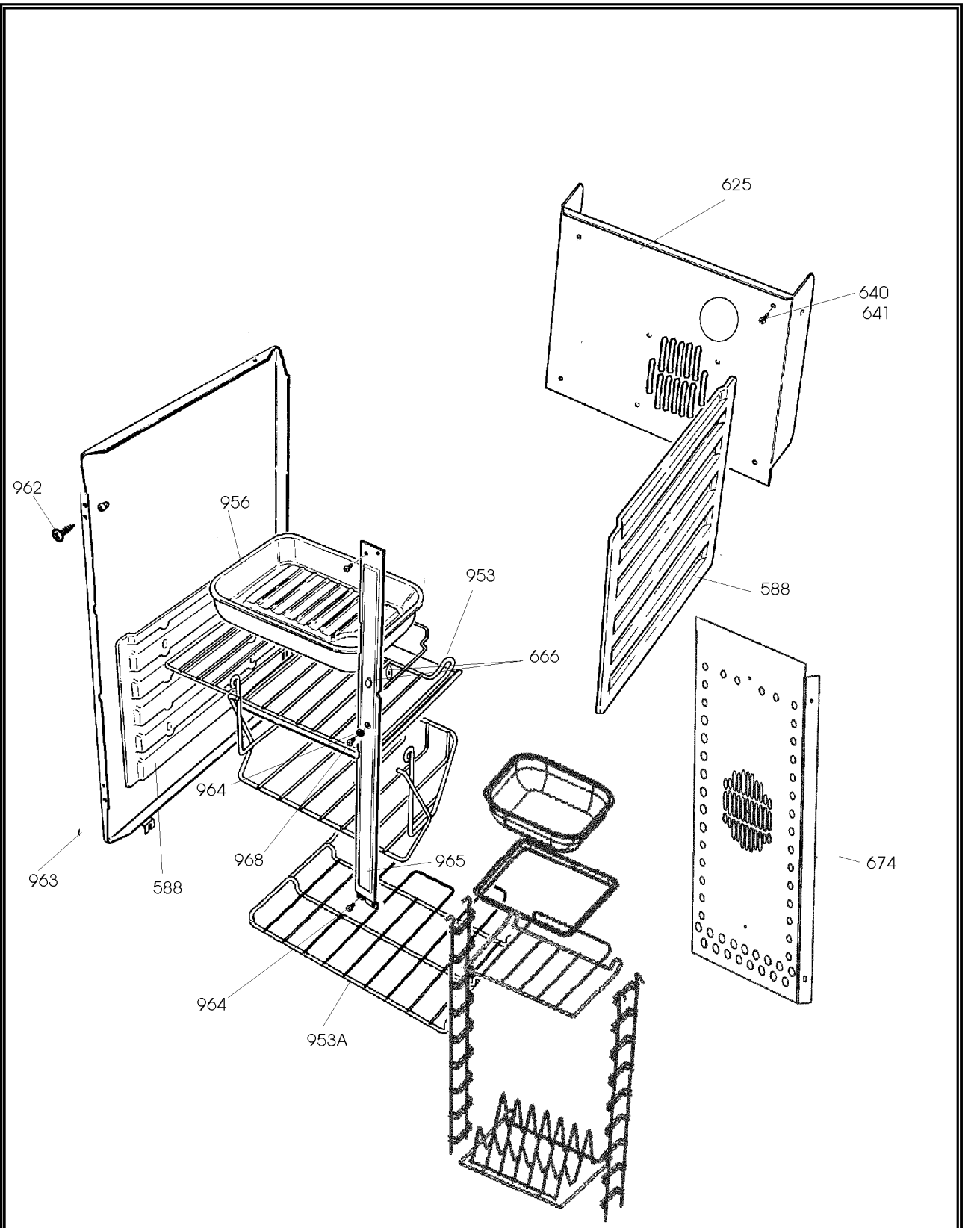
625
640
641
962
956
953
588
666
964
968
965
674
963
588
964
953A

APPLIANCE NAME: ALL MODELS
ELAN 90 CERAMIC UK

DATE 12.01.05

DSL0265 P00

ISSUE STATUS 01

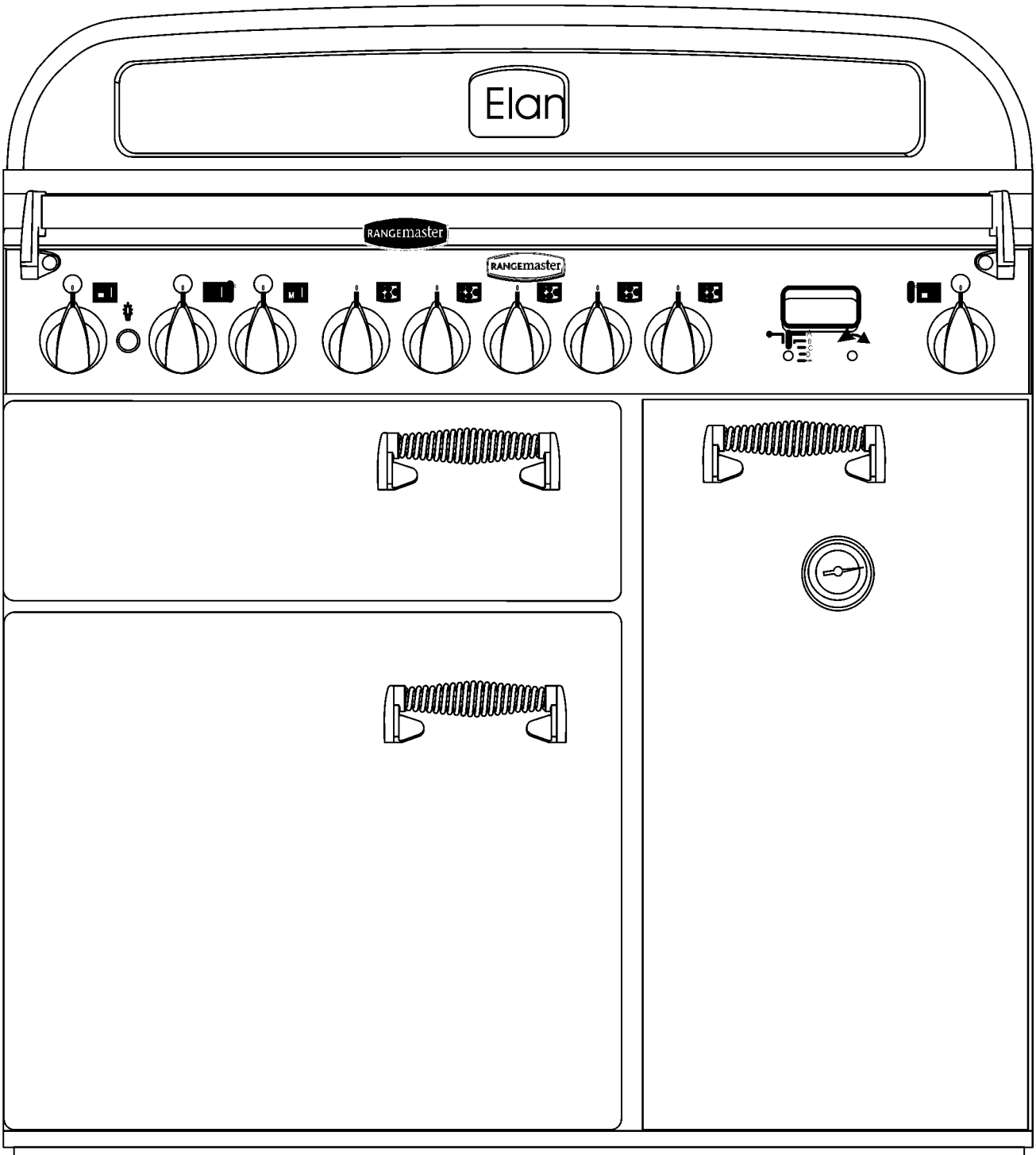

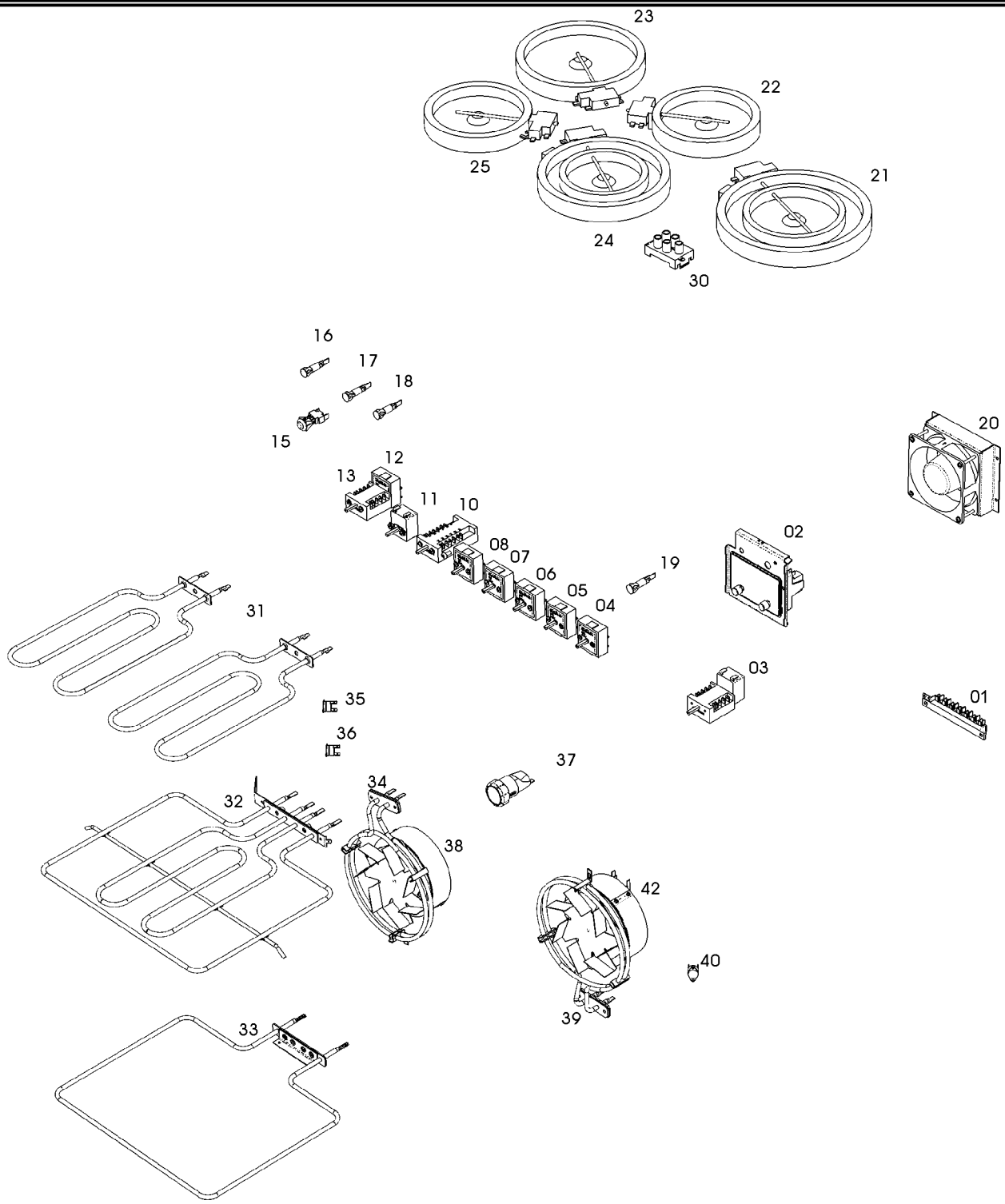

Ref	Harness	90 Elan Ceramic	QTY	Connects Components										
861	P038727	Radiant Hob Switch Harness Phase 1 & 2	1	1	4	5	6	7	8					
862	P036587	Grill Harness	1	1	12	31								
863	P036588	Left Hand Oven Harness	1	1	10	11	13	15	17	18	32	33	34	35
864	P036590	Right Hand Oven Harness	1	1	2	3	14	19	20	39	40	41	42	
865	P036591	Earth Link	1	1	39	42								
866	P036526	Facia Links Harness	1	2	3	10	11	13	16	17	18	19		
867	P036530	Neutral Link	1	39	40	42								
868	P036531	Earth Link	1	1	39	41	42							
869	A094943	Wire Assembly (Earth Wire)	1	3										
870	A055374	Wire Assembly (Earth Wire)	2	31										
871	P033089	Neutral Link	1	32	33	34	35	36	38					
872	A094948	Cut Out Link	1	31	34									
873	P027940	RHI Live	1	4	21	22	23	24	25					
874	P027820	Single Cicuit Hob	3	5	6	8	22	23	25					
875	P030544	Dual Circuit Hob	2	4	7	21	24							
876	P028011	Residual Heat Indicator Neutral	1	4	30									