1DNF320A+S180C

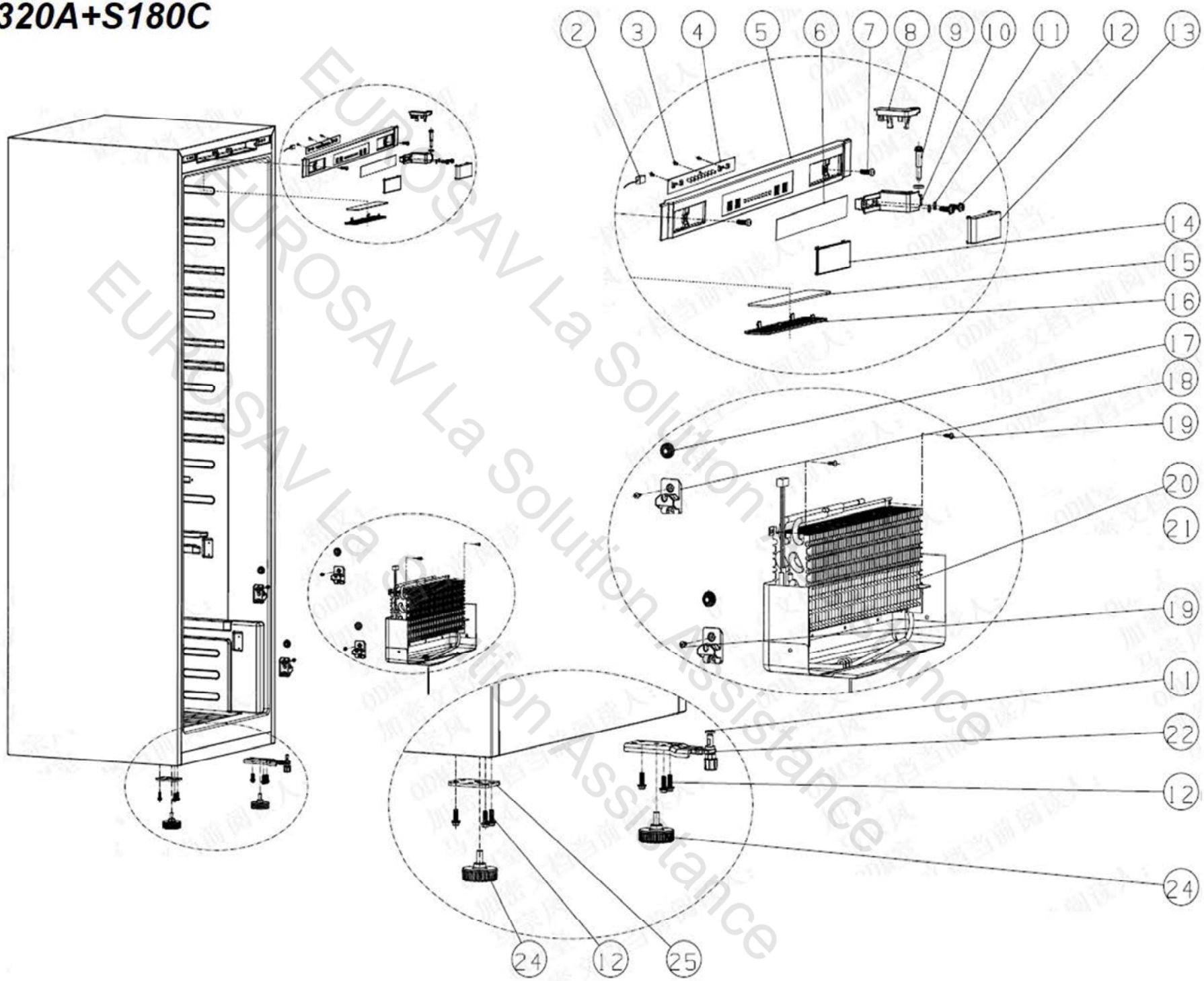

EUROSAV La Solution Assistance

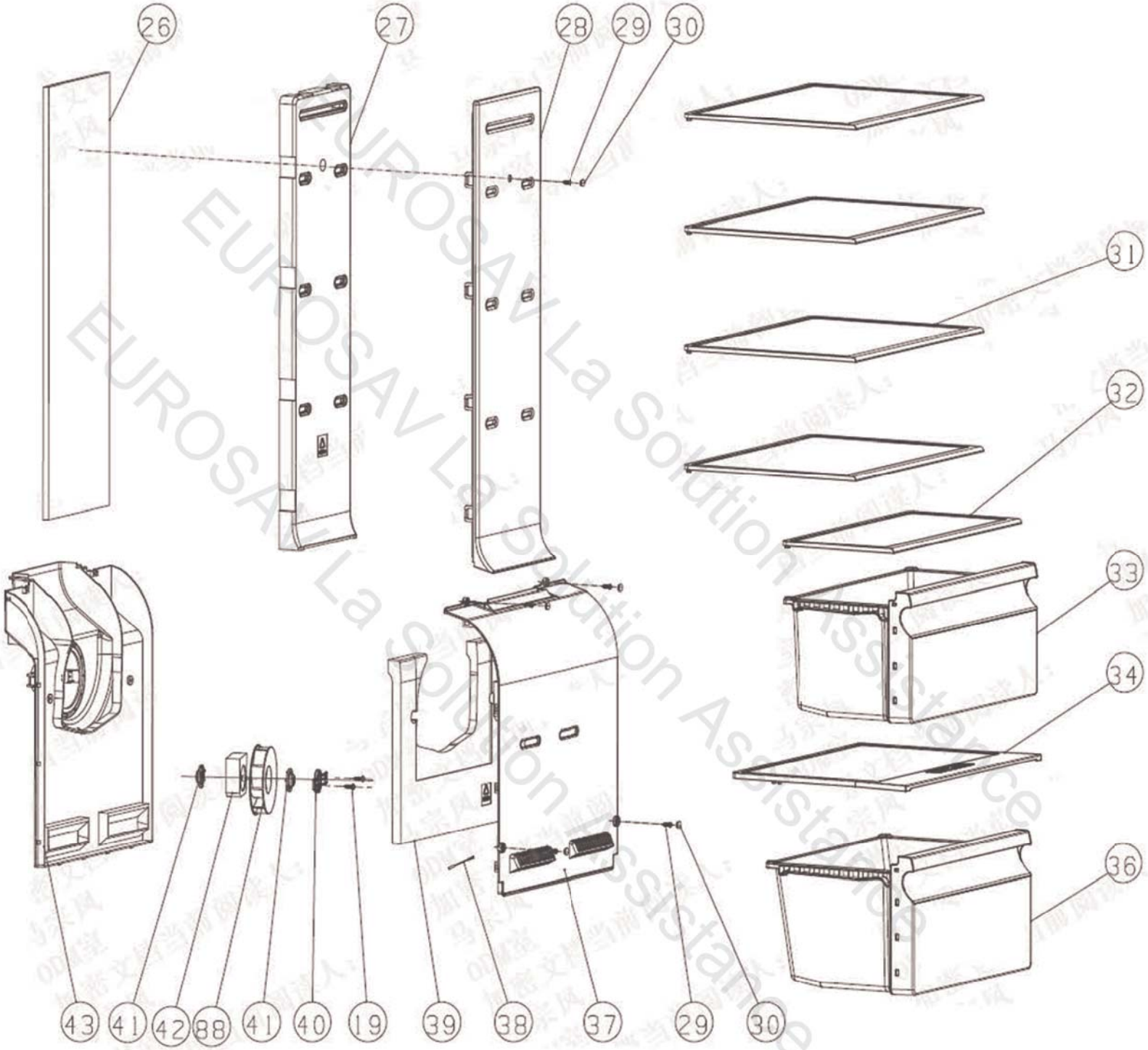

EUROSAV La Solution Assistance

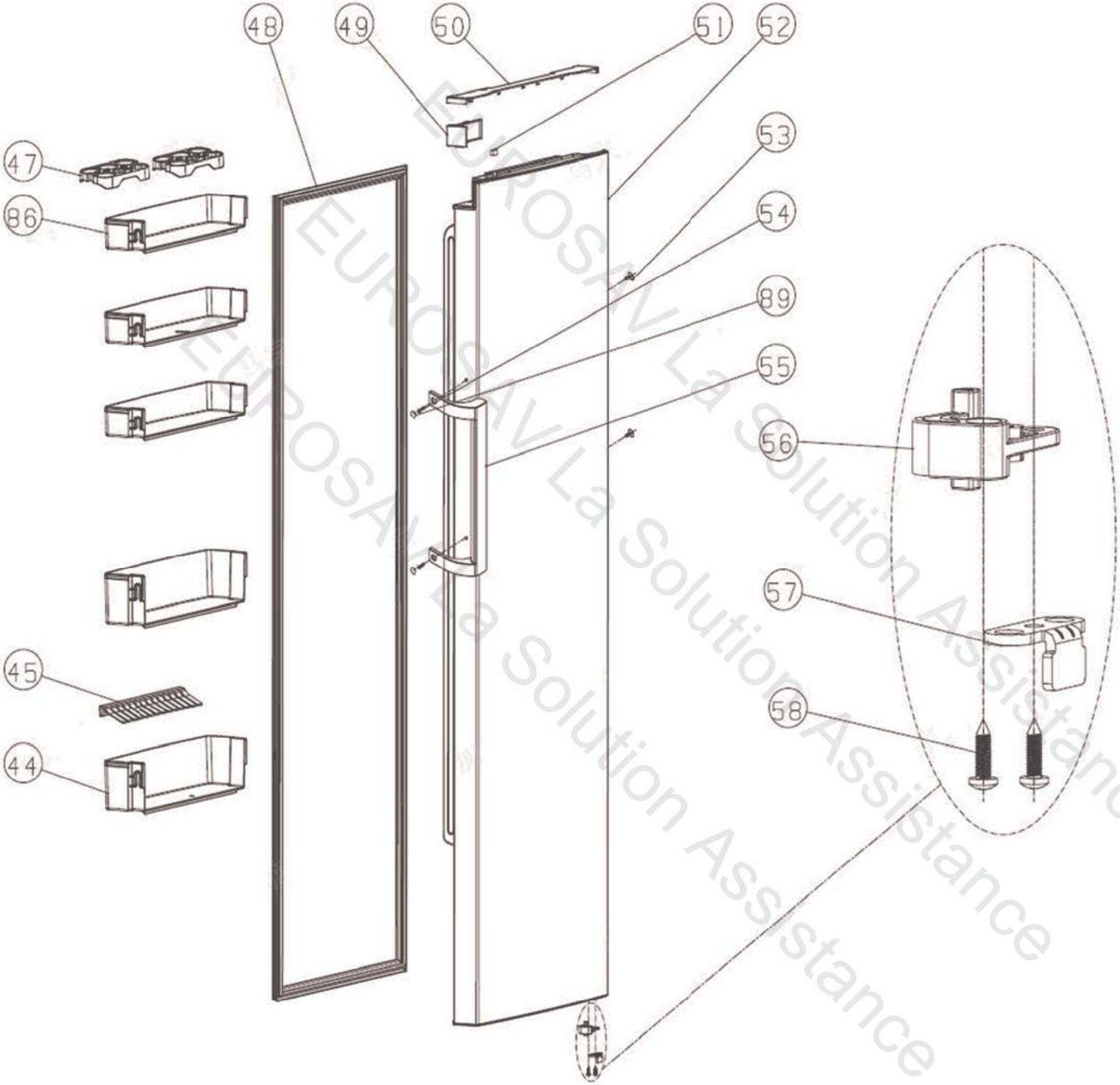

EUROSAV La Solution Assistance

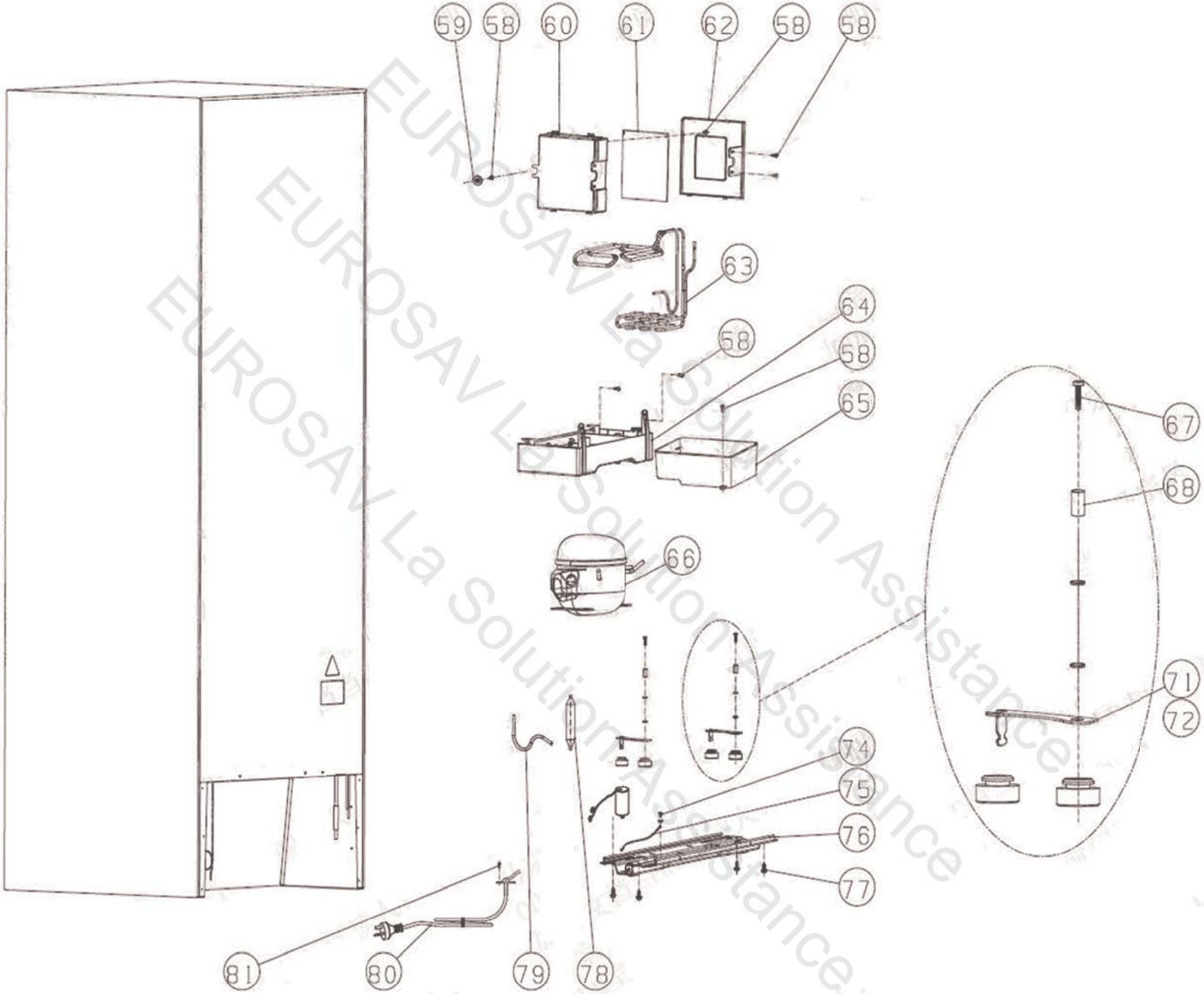

EUROSAV La Solution Assistance
EUROSAV La Solution Assistance
EUROSAV La Solution Assistance