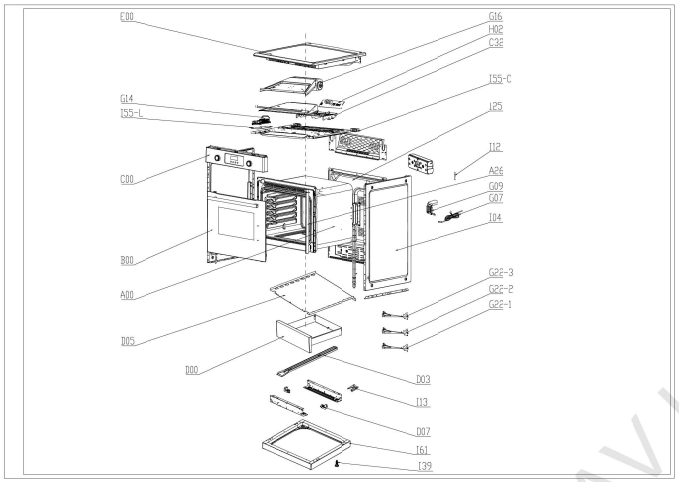

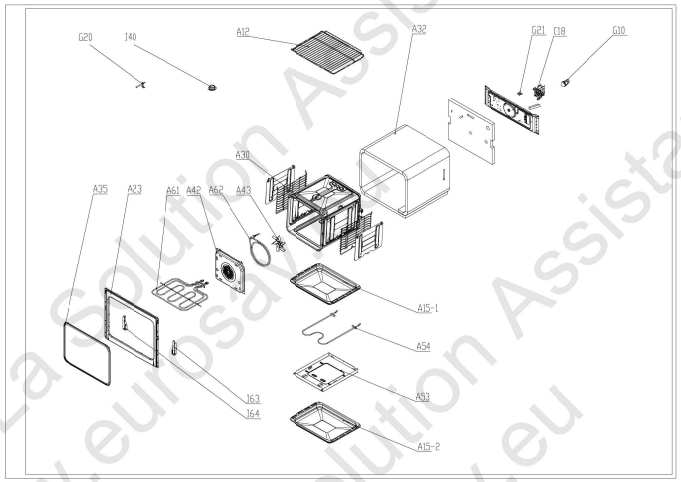

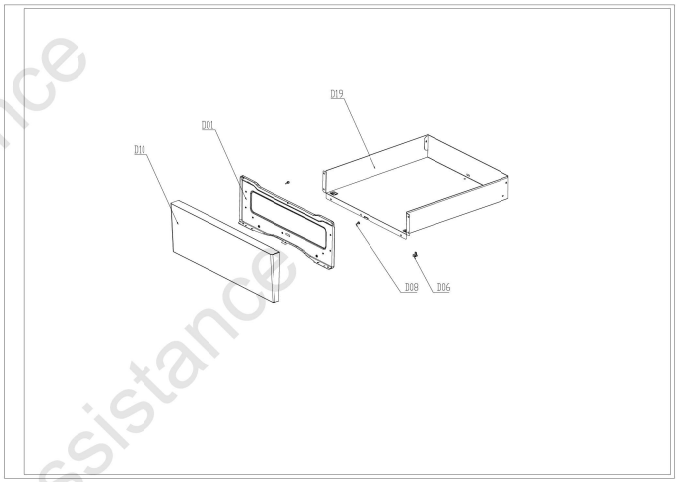

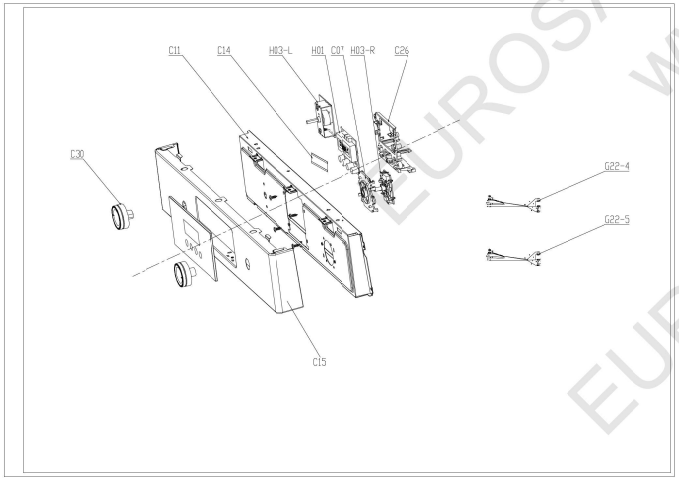

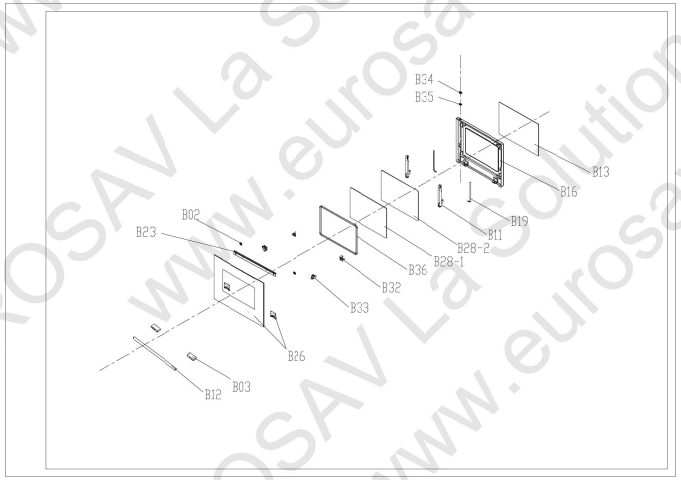

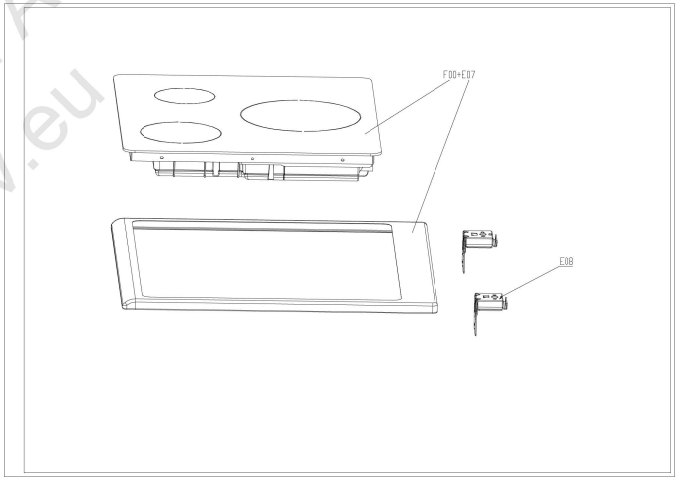

EUROSAV La Solution Assistance
www.eurosav.eu

F00

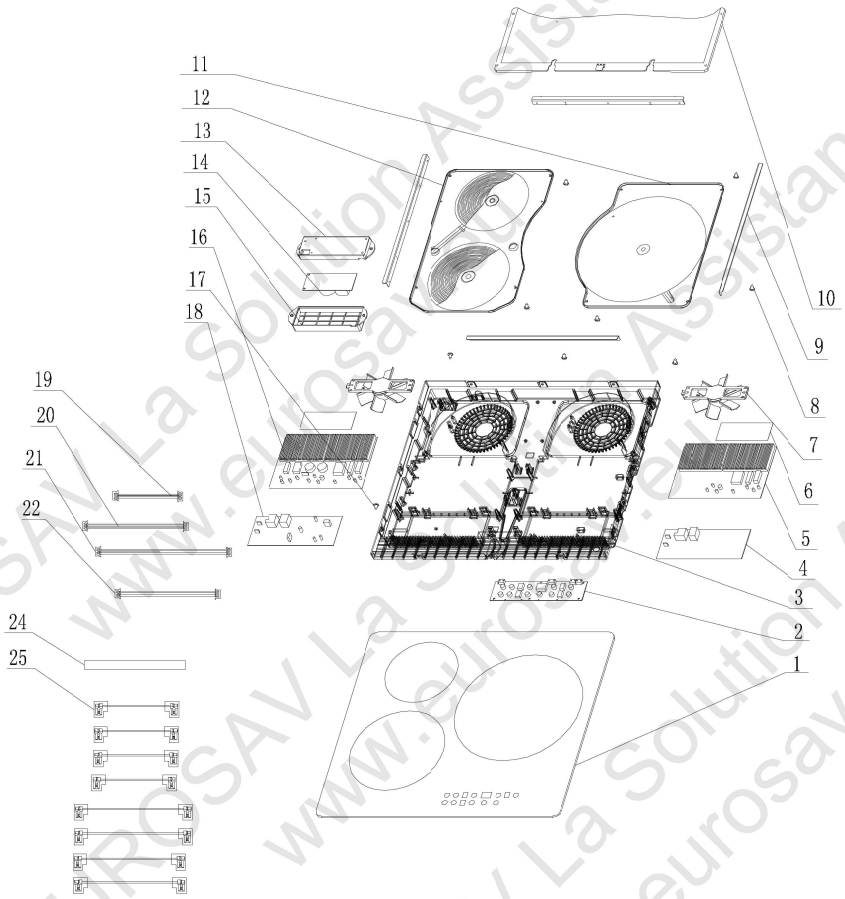

EUROSAV La Solution Assistance
www.eurosav.eu